NYB

MODULAR CHILLERS FEATURING INTEGRATED FREE COOLING OPERATION

The most compact free cooling chiller in North America.
AHRI rated performance.
High efficiency and redundancy levels.

The AHRI rated free cooler

A fast changing world is asking for new and intelligent solutions. An increased need for lower energy consumptions and reduced carbon footprints comes hand in hand with a search for solutions which adapt to Users' continuously changing needs. All this with a desire for guaranteed performance at all times without downtimes, mated with simple and quick maintenance.
NYB, the AHRI rated free cooling chiller and the most compact free cooling chiller in North America, offers all these benefits, thanks to unique design solutions and a modular configuration allowing multiple NYB modules to be effortlessly interconnected.

Efficient & ecological

NYB meets New York City codes and is the only chiller with integrated free cooling coils that is AHRI rated to meet ASHRAE 90.1-2010 minimum efficiency levels. The microchannel condensers allow a 40% lower charge of zero ODP R410A refrigerant. A free source of hot water is available using the desuperheater option.

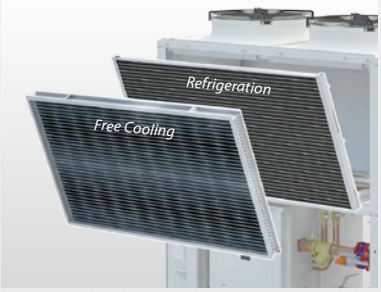

Integral free cooling coils

Guaranteed peace of mind

NYB is cUL certified and offers AHRI rated performance. Every module, prior to leaving the factory, goes through a functionality and a performance test at AERMEC's certified climatic test chamber. AERMEC's unmatched dedication to quality ensures that every unit leaves the factory ready for use. Factory witness tests are available upon request.

Aermec's advanced test facilities

Easy to install, easy to use

NYB is the most compact free cooling chiller in North America, and easily fits through doors and into elevators. Victaulic connections between the onboard headers allow for quick and easy installation. With numerous voltage options and a standard ambient operating range of -20 to 115 degrees, the NYB can be applied to nearly any application.

Fits through doors and into elevators

Quick and easy servicing

NYB is completely accessible from the ends of the unit. This allows in-row servicing of a module without interruption to adjacent modules. Each unit is fitted with isolation valves on the chilled water and the refrigeration circuits for ease of service. Condenser coil filters keep coils clean and operating efficiently.

Hinged electrical panel

Advanced user friendly control

Multichiller is a user friendly microprocessor controller that optimizes the operation of mechanical cooling and free cooling to ensure the lowest overall energy consumption. NYB allows serial connection via Bacnet, ModBus and LON.
Double set point programming is offered as standard.

User friendly microprocessor

Lowest noise levels

NYB's market leading sound levels provide a solution to sound sensitive applications. Extensive acoustical testing has allowed sound level reductions through compressor enclosures and specially designed low noise, inverter driven fans. The Night Mode program offers significant noise reductions during crucial night hours.

Enclosed compressor compartment

Multiply your benefit

NYB allows you to multiply your benefits when applying multiple modules together.
All the notable advantages of the single NYB module are retained and transformed into a unique solution which perfectly combines the plus points of both a single large free cooling chiller and multiple smaller units.
Highest safety and redundancy, excellent energy efficiency and an extremely flexible solution truly meet any and all User needs. Furthermore multiple NYB modules retain a 100% free cooling capacity, and add no added dimensions despite the modular concept.

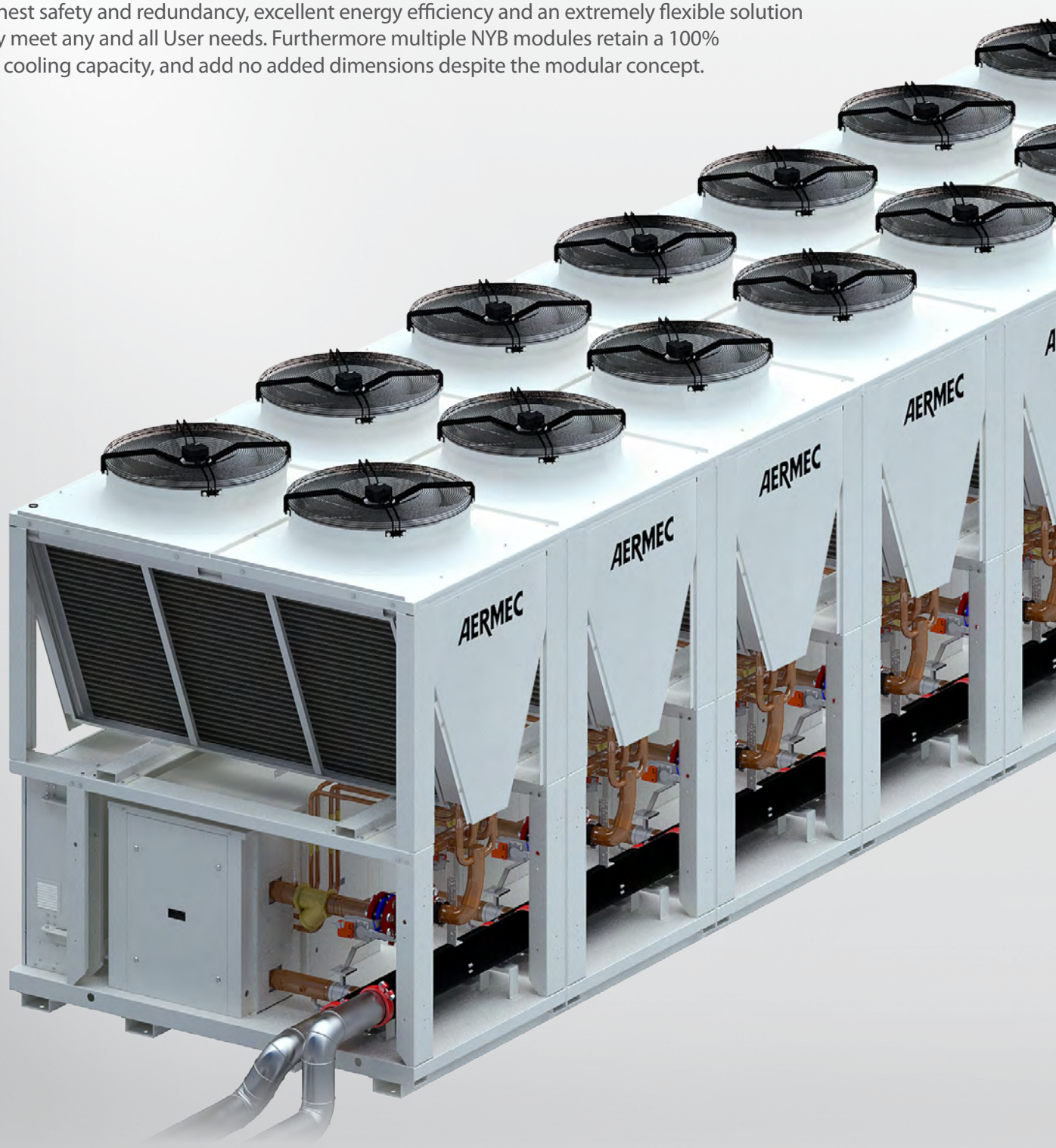

All the benefits of a single large chiller

When interconnecting multiple NYB modules you obtain all the benefits of a single large chiller of up to 255 tons. As many as 9 modules can be interconnected to a single microprocessor controller, transforming NYB into a single unit with 18 compressors and 18 independent refrigeration circuits, plus 9 independent free cooling circuits. The microprocessor manages and optimizes these to perfectly achieve the desired temperatures whilst modulating partial load savings across the multiple cooling steps. Quick and easy hydraulic interconnection using Victaulic connectors offer fast installation. The single modules can be placed against each other thereby taking up no more space than a single larger chiller and less than one with a separate free cooling section.

All the benefits of multiple smaller chillers

Each NYB module within a multiple connection is still able to act fully independently. Each module features its own electrical connection and main switch, in the unlikely event of any malfunction within a single module it can be easily isolated from the others, which can then continue to operate as the faulty module is repaired. NYB also offers scalability, further modules can be simply added at a later date as and when capacity requirements increase.

Highest redundancy offers even greater peace of mind

Multiple NYB modules offer total peace of mind. Beyond the safety of multiple compressors, refrigeration circuits, free cooling circuits and electrical panels, if desired it is even possible to add a further module to act as a safety back-up; in this case full performance is guaranteed even if a single module fails, which can be repaired whilst the unit is running.

Even higher energy efficiency

NYB's leading energy efficiency characteristics are fully exploited in modular configurations. As each module features its own integrated free cooling section so multi-module units maintain a 100% free cooling capacity. And thanks to multiple compressors (2 per module, so 18 for a 9 module configuration offering 5,5% cooling steps) NYB can perfectly partialize its performance, including free cooling, with a single advanced microprocessor managing the process with optimal precision.

Features

NYB is made of independent 28 ton modules which can be connected together to offer up to 255 ton cooling capacity. Every single module is an external chiller producing chilled water with high efficiency scroll compressors, axial fans, microchannel coils, system side plate heat exchanger. Units with the desuperheater option can also produce hot water for free. The base, the structure and the panels are made of treated galvanised steel with rustproof polyester paint. With NYB it is possible to couple up to 9 chillers, designed to reduce overall unit dimensions to a minimum. This modularity adapts the installation to actual system development requirements. In this way, the cooling capacity can be increased over time in a simple and economic manner.

Versions:

NYB_°	Cooling Only
NYB_F	Free-cooling

Operating range:

Operation at up to 115°F outdoor air temperature at full load.

• NYB is made of 2 chiller circuits to ensure continuity even if one of the two is stopped.
The careful choice of components, the particular configuration and the option of connecting multiple independent modules and managing them as if they were a single unit, allows maximum yield at full load, but also with partial loads thanks to the partialisation steps that increase as the connected modules increases, ensuring continual adaptation to actual system requests.

• The electrical control panel, present in every unit, together with the control logic implemented, allows each module to operate in synergy with the others, whilst ensuring continued operation if one or more modules fail.

Modularity is essential for component redundancy, as it allows a safer system design and increased reliability.

• The modules are easy to install and can be connected together, both from the hydraulic and the electrical point of view, making it possible to fine tune the system.
Hydraulic connections are facilitated by victaulic connections, while electrical connections are simplified by the presence of a hinged electrical control panel on each unit.

• The chiller module uses aluminium microchannel coils, ensuring very high levels of efficiency. These coils use less refrigerant compared to traditional copper/aluminium coils.

• To respond to multiple system requirements, a Free cooling version is also available, particularly indicated if the requirement for chilled water is significant even during the winter period. In fact, the greater the difference between the outside air and requested water temperature, the greater the economical advantage of using free cooling.

• The NYB module is already supplied with a water filter and interception valves to facilitate cleaning and maintenance. As an accessory, an air filter protecting the coil facilitates cleaning and guarantees good heat exchange.

• The microprocessor, with keyboard and LCD display, allows easy consultation and intervention on the unit via a menu, available in several languages. Adjustment includes complete management of the alarms and their log.
- The presence of a programmable timer allows operation time bands setting and programming of a possible second set-point.
- The temperature control takes place with the integral proportional logic, based on the water outlet temperature.
- With night Mode it is possible to set a silent mode profile. Perfect for night operation, it guarantees greater acoustic comfort, nonetheless offering, a high efficiency in the time of greater load.

NB: The "J" inverter fan is compulsory for the Night Mode.

Accessories

• AER485P1: RS-485 interface for supervising systems with MODBUS protocol.

• PGD1: Remote chiller controlling.

• MULTICHILLER: Control system for control, switch-on and switch-off of single chillers in a plant where multiple units are installed in parallel, always ensuring constant flow to the evaporators.

• FB: Air filter protecting micro channel coils. composed of a frame and a composite structure of micro-expanded aluminium mesh, with very low pressure drops.

Accessories mounted in the factory

• DRE: Soft starter (peak current reduction).

• RIF: Current power factor correction. Connected in parallel to the motor, it ensures a reducted input current (approx. 10%).

• GP: Anti-intrusion grid.

• COMPATIBILITY with Aermec VMF SYSTEM

For further information on this system, refer to the specific documentation.

Technical data

PERFORMANCE

NYB standard model			0500
Cooling capacity		ton	29.0
Input power		kW	32.9
EER		BTU/W	10.6
Water flow rate		gpm	69.4
Pressure drop		psi	2.5
NYB free cooling model			
Cooling capacity		ton	28.5
Input power		kW	33.8
EER		BTU/W	10.1
Water flow rate		gpm	68.2
Pressure drop		psi	2.42
Cooling capacity		ton	24.0,
Input power		kW	4.5
EER		BTU/W h	63.1
Water flow rate		gpm	68.0
Pressure Drop		psi	6.0

GENERAL DATA

Electrical data			
Total absorbed current (Standard)	208V/3/60Hz	A	138
	230V/3/60Hz	A	124
	460V/3/60Hz	A	58
	575V/3/60Hz	A	45
Total absorbed current (Free cooling chiller)	208V/3/60Hz	A	140
	230V/3/60Hz	A	126
	460V/3/60Hz	A	58
	575V/3/60Hz	A	45
Compressors		type	scroll
no. Compressors		no.	2
no. Circuits		no.	2
Refrigerant		type	R410A
System heat exchanger		type	plate
no. Heat exchangers		no.	1
Standard fans		type	axial
no. Fans		no.	2
Air flow rate (Chiller)		cfm	23543
Air flow rate (Free cooling)		cfm	20012
Sound data			
Sound power level (Chiller)		dB(A)	89.4
Sound power level (Free cooling)		dB(A)	88.4
Dimensions and Weight			
Height	A	in	96,5
Widht	B	in	86,6
Depth	C	in	46,9
Weight		ib	2249

- **Cooling mode**
  Evaporator water temperature (in/out) 54°F/44°F;
  Outdoor air temperature 95°F;
- **Cooling mode - free cooling (100%)**
  Evaporator water temperature (in) 59°F;
  Outdoor air temperature 35.6°F

Sound power level
Aermec determines sound power levels on the basis of measurements taken in accordance with UNI EN ISO 9614-2 Standards.

Select your NYB unit

By appropriately combining the variety of options available, every model can be configured in order to meet all specific system requirements.

Field		Description
1, 2, 3		NYB
4, 5, 6, 7		Size
		0500
8		Scope of application
	•	Standard (produced water down to +39°F)
9		Model
	•	Cooling Only
	F	Free cooling
10		Heat recovery
	•	Without heat recovery
	D	With desuperheater
11		Version
	A	High efficiency
12		Coils
	•	Aluminium microchannel
	O	Painted aluminium microchannel
	R	Copper - Copper
	S	Copper - Tinned
13		Fans
	•	Standard
	J	Inverter (1)
14		Power supply
	6	230/3/60Hz with magnetic circuit breakers
		460/3/60Hz with magnetic circuit breakers
		575/3/60Hz with magnetic circuit breakers
		208/3/60Hz with magnetic circuit breakers
15-16		Integrated hydronic kit
	00	Without hydronic kit

(1) Standard for free cooling version

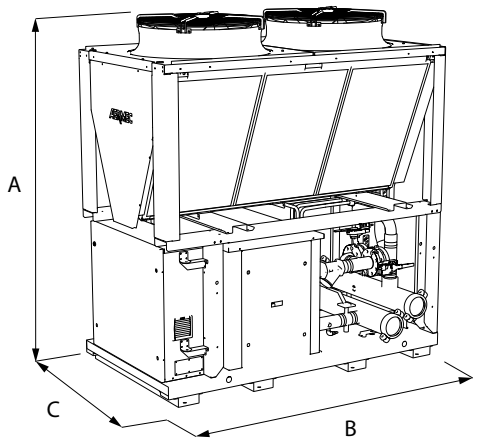

HANGAR DESIGN GROUP

Aermec S.p.A.
Via Roma, 996
37040 Bevilacqua (VR) - Italia
Tel. + 39 0442 633111
Fax +39 0442 93577
sales@aermec.com
www.aermec.com

AERMEC
air conditioning