RenewAire®
Energy Recovery Ventilation

ERV

EV450 & HE SERIES

COMMERCIAL ERV CATALOG

AUGUST 2019

RENEWAIRE.COM | 800.627.4499

BECAUSE INDOOR
AIR QUALITY MATTERS

As buildings become more airtight due to better construction methodologies, the need for increased and balanced ventilation is critical. Without it, internally generated contaminants accumulate and cause **deficient indoor air quality** (IAQ), which leads to significant health and cognitive problems for occupants. Industry standards are changing to combat deficient IAQ, and codes that adopt these new standards are driving the application of Energy Recovery in ventilation strategies. Deficient IAQ is a serious problem, especially considering:

- On average, Americans spend 90% of their time indoors
- The EPA found that indoor air may be 2-5 times—and occasionally greater than 100 times—more polluted than outdoor air
- The EPA ranks indoor air pollutants as a top-five environmental health risk to occupants

ADVERSE EFFECTS OF **DEFICIENT IAQ**

Deficient IAQ has numerous adverse effects on the health and cognitive function of building occupants.

Health problems: Acute allergies, headaches, coughs, asthma, skin irritations and breathing difficulties, as well as chronic illnesses such as cancer, liver disease, kidney damage and nervous-system failure.

Cognitive impairment: Studies by the Harvard School of Public Health and the Lawrence Berkeley National Laboratory found that carbon dioxide (CO_2)—an indoor air contaminant—negatively impacted thinking and decision-making at levels commonly found inside homes and buildings.

ABOUT RENEWAIRE

For over 30 years, **RenewAire has been a pioneer in enhancing IAQ** in commercial and residential buildings of every size. This is achieved while maximizing sustainability through our fifth-generation, enthalpic-core, static-plate Energy Recovery Ventilators (ERVs) & Dedicated Outdoor Air Systems (DOAS) that **optimize energy efficiency**, lower capital costs and **decrease operational expenses** by reducing HVAC loads therefore minimizing equipment needs, resulting in significant energy savings. Our ERVs/DOAS are competitively priced, simple to install, easy to use and maintain, have a quick payback and enjoy the industry's best warranty with the lowest claims due to long-term reliability. In 2010, RenewAire joined the Soler & Palau (S&P) Ventilation Group, providing direct access to the latest in energy-efficient air-moving technologies. For more information, visit: **renewaire.com.**

TABLE OF CONTENTS

EV450 - Light Commercial Unitary ERV

MODEL	TYPE	CFM RANGE	PAGE
EV450IN - STANDARD	Indoor	200-540 CFM	4-5
EV450IN - EC MOTOR OPTION	Indoor	200-530 CFM	6-7
EV450RT - STANDARD	Rooftop	240-500 CFM	8-9, 12-13
EV450RT - EC MOTOR OPTION	Rooftop	200-510 CFM	10-13

HE1X - Light Commercial Unitary ERV

MODEL	TYPE	CFM RANGE	PAGE
HE1XINH - STANDARD	Indoor	250-925 CFM	14-15
HE1XINH - EC MOTOR OPTION	Indoor	250-1,100 CFM	16-17
HE1XINH - STANDARD BYPASS OPTION	Indoor	250-925 CFM	18-19
HE1XINH - EC MOTOR BYPASS OPTION	Indoor	250-1,100 CFM	20-21
HE1XINV - STANDARD	Indoor	250-925 CFM	22-23
HE1XINV - EC MOTOR OPTION	Indoor	250-1,100 CFM	24-25
HE1XINV - STANDARD BYPASS OPTION	Indoor	250-925 CFM	26-27
HE1XINV - EC MOTOR BYPASS OPTION	Indoor	250-1,100 CFM	28-29
HE1XRT - STANDARD	Rooftop	250-870 CFM	30-32
HE1XRT - EC MOTOR OPTION	Rooftop	250-1,100 CFM	34-36
HE1XRTC - STANDARD	Rooftop	500-900 CFM	38-39
HE1XRTC - EC MOTOR OPTION	Rooftop	500-1,100 CFM	40-41

HE1.5X - Commercial Unitary ERV

MODEL	TYPE	CFM RANGE	PAGE
HE1.5XINH - STANDARD	Indoor	375-1,575 CFM	42-43
HE1.5XINH - EC MOTOR OPTION	Indoor	375-1,575 CFM	44-45
HE1.5XINH - STANDARD BYPASS OPTION	Indoor	375-1,575 CFM	46-47
HE1.5XINH - EC MOTOR BYPASS OPTION	Indoor	375-1,575 CFM	48-49
HE1.5XINV - STANDARD	Indoor	375-1,575 CFM	50-51
HE1.5XINV - EC MOTOR OPTION	Indoor	375-1,575 CFM	52-53
HE1.5XINV - STANDARD BYPASS OPTION	Indoor	375-1,575 CFM	54-55
HE1.5XINV - EC MOTOR BYPASS OPTION	Indoor	375-1,575 CFM	56-57
HE1.5XRT - STANDARD	Rooftop	375-1,575 CFM	58-60
HE1.5XRT - EC MOTOR OPTION	Rooftop	375-1,525 CFM	62-64

ABOUT RENEWAIRE	2-3
SPECIFICATIONS & DIMENSIONS	4-119
OPTIONS & ACCESSORIES	121-139
ORDERING & SUPPORT	141-144

HE2X - Commercial Unitary ERV

MODEL	TYPE	CFM RANGE	PAGE
HE2XINH - STANDARD	Indoor	500-2,200 CFM	66-67
HE2XINH - STANDARD BYPASS OPTION	Indoor	500-2,200 CFM	68-69
HE2XINV - STANDARD	Indoor	500-2,200 CFM	70-71
HE2XINV - STANDARD BYPASS OPTION	Indoor	500-2,200 CFM	72-73
HE2XRT - STANDARD	Rooftop	500-2,000 CFM	74-76
HE2XRTC - STANDARD	Rooftop	500-1,700 CFM	78-79

HE3X - Commercial Unitary ERV

MODEL	TYPE	CFM RANGE	PAGE
HE3XINH - STANDARD	Indoor	750-3,300 CFM	80-81
HE3XINH - STANDARD BYPASS OPTION	Indoor	750-3,300 CFM	82-83
HE3XINV - STANDARD	Indoor	750-3,300 CFM	84-85
HE3XINV - STANDARD BYPASS OPTION	Indoor	750-3,300 CFM	86-87
HE3XRT - STANDARD	Rooftop	750-3,300 CFM	88-90
HE3XRTC - STANDARD	Rooftop	1,100-2,400 CFM	92-93

HE4X - Commercial Unitary ERV

MODEL	TYPE	CFM RANGE	PAGE
HE4XINH - STANDARD	Indoor	1,000-4,400 CFM	94-95
HE4XINH - STANDARD BYPASS OPTION	Indoor	1,000-4,400 CFM	96-97
HE4XINV - STANDARD	Indoor	1,000-4,400 CFM	98-99
HE4XINV - STANDARD BYPASS OPTION	Indoor	1,000-4,400 CFM	100-101
HE4XRT - STANDARD	Rooftop	1,000-4,400 CFM	102-104
HE4XRTC - STANDARD	Rooftop	2,500-3,900 CFM	106-107

HE6X - Commercial Unitary ERV

MODEL	TYPE	CFM RANGE	PAGE
HE6XIN - STANDARD	Indoor	1,500-6,500 CFM	108-109
HE6XIN - STANDARD BYPASS OPTION	Indoor	1,500-6,500 CFM	110-111
HE6XRT - STANDARD	Rooftop	1,500-6,500 CFM	112-113

HE8X - Commercial Unitary ERV

MODEL	TYPE	CFM RANGE	PAGE
HE8XIN - STANDARD	Indoor	2,000-7,950 CFM	114-115
HE8XIN - STANDARD BYPASS OPTION	Indoor	2,000-7,950 CFM	116-117
HE8XRT - STANDARD	Rooftop	2,000-7,950 CFM	118-119

RENEWAIRE ERVs
ACHIEVE SUSTAINABLE IAQ

RenewAire is a **pioneer in enhancing IAQ** while maximizing sustainability through enthalpic-core, static-plate Energy Recovery Ventilators (ERVs) that **optimize energy efficiency, lower costs by reducing HVAC loads and therefore reduce environmental footprints**. Our ERV technology preconditions incoming air with the otherwise-wasted energy (heat and humidity) of the exhaust air going out—all while the airstreams are kept physically separate as certified by the Air Conditioning, Heating and Refrigeration Institute (AHRI) for low-to-zero Exhaust Air Transfer Ratio (EATR) at typical static pressure differentials. As the pioneer of static-plate core technology in North America, RenewAire is the largest ERV producer in the USA.

OPTIMIZING ENERGY EFFICIENCY

Energy efficiency is optimized by preconditioning the outside air coming in with the **otherwise-wasted heat and humidity** of the exhaust air going out. This exchange of energy moderates temperatures and moisture, decreases HVAC equipment needs, drives operational efficiencies and conserves energy.

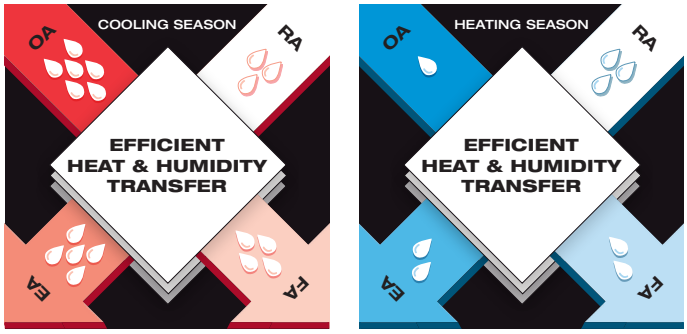

REDUCING HVAC LOADS

RenewAire technology reduces **HVAC loads** during both winter and summer. In turn, HVAC equipment size and needs can be decreased and furnaces and air conditioners can be smaller. This process ensures efficient operations and keeps both energy use and costs low, while at the same time maintaining high-level IAQ.

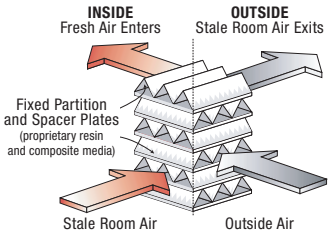

MINIMIZING ENVIRONMENTAL IMPACT

The combination of less energy used and HVAC loads being reduced conserves resources. Further, our Madison, WI plant is 100% powered by renewable wind energy, and is one of the few buildings worldwide to be LEED and Green Globes certified, as well as having achieved ENERGY STAR Building status. This commitment to sustainable manufacturing minimizes our overall production and distribution environmental footprint.

WHY RENEWAIRE IS PREFERRED

BEST VALUE

- Priced competitively against other ERV models
- Due to competitive pricing and decreased costs, payback is short and ROI is maximized
- Contractors can pass these significant savings along to their customers

RELIABLE OPERATION

- Built-to-last ERVs have lifespans of 25+ years and operate consistently year-round in every extreme, including frost-free performance in all but the most severe winter climates
- High-efficiency core operates dry in all conditions, meaning no condensate pans
- An industry-leading ten-year warranty for the static-plate core, two-year warranty for commercial products and a five-year warranty for residential products
- Superior product quality results in paramount reliability and longevity

HIGHEST-QUALITY INDOOR AIR

- Stale indoor air is replaced with fresh, conditioned and filtered air from the outside, resulting in Enhanced IAQ by removing harmful contaminants
- Airstreams do not mix and pollutants are not transferred across partition plates
- No biocide used; material does not promote biological growth
- Moderated temperatures and humidity maintain a comfortable indoor environment

OPTIMIZED ENERGY EFFICIENCY

- Efficient heat and humidity transfer recaptures up to 70-80% of the energy exhausted in the airstream
- Energy that's otherwise wasted by conventional ventilation systems (such as bath fans) is reused, thus dramatically reducing monthly operation costs
- Energy-efficient operation decreases HVAC loads, which cuts down on energy use and costs
- The hotter or colder the climate, the more energy is recovered

HIGHLY CERTIFIED

- See individual catalog submittal for certification details:
  - UL
  - cUL
  - ETL
  - HVI
  - AHRI

EV 450IN

Energy Recovery Ventilator
Standard

INDOOR UNIT

Download specification at:
renewaire.com/specifications

SPECIFICATIONS

Ventilation Type:
Static plate, heat and humidity transfer

Typical Airflow Range: 200-540 CFM

AHRI 1060 Certified Core: One L85-G5

Standard Features:
Non-fused disconnect
24 VAC transformer/relay package
Cross-core differential pressure ports

Filters:
Total qty. 2, MERV 8: 14" x 20" x 2"

Unit Dimensions & Weight:
54 1/2" L x 16 3/8" W x 36 3/4" H
137-199 lbs., varies by option(s)

Max. Shipping Dimensions & Weight (on pallet):
62" L x 42" W x 22" H
250 lbs.

Motor(s), choice of:
Qty. 1, 0.6 HP (standard single phase)
Qty. 1, 0.5 HP (standard three phase)

Options:
Qty. 1, Variable Speed/ECM - Direct Drive Motors (see EV450IN EC Motor submittal) - 0.5 HP, 120V/1Ph/60HZ, 0.5 HP, 208-230V/1Ph/60HZ
Fused disconnect
Integrated programmable controls - enhanced, premium
Qty. 2, Factory mounted filter alarms - both airstreams
Double wall construction
Exterior paint - white, custom colors

Accessories:
Filters - MERV 13, 2" (shipped loose)
Backdraft damper 10"
Wall cap 10" - galvanized, paintable galvanneal
Vibration isolation kit
Hanging bracket kit
Transition kit 10" - round, qty. 2
Flange kit - rectangular 12" x 8", 2 flanges
Solid state speed control kit - 115V, qty. 1, 208-230V, qty. 1
Digital time clock - wall mount (TC7D-W), in exterior enclosure (TC7D-E)
Carbon dioxide sensor/control - wall mount (CO2-W), duct mount (CO2-D)
IAQ sensor - wall mount (IAQ-W), duct mount (IAQ-D)
Motion occupancy sensor/control - ceiling mount (MC-C), wall mount (MC-W)
Smoke detector - duct mount (SD-D)
Louver with 10" round duct connection - 12" (W) x 12" (H)
Electric duct heater - RH series (1-11.5 kW); EK series (1–175 kW); designed for indoor ductwork installation only

Note: Indirect Gas-Fired Duct Furnace is not available on the EV450IN.

ELECTRICAL DATA

HP	Volts	HZ	Phase	FLA	Min. Cir. Amps	Max. Overcurrent Protection Device
0.6	120	60	Single	7.2	9.0	15
0.6	208-230	60	Single	3.9-3.6	4.9	15
0.6	277	60	Single	3.5	4.4	15
0.5	208-230	60	Three	1.7-1.5	2.1	15
0.5	460	60	Three	0.8	1.0	15

UNIT PERFORMANCE

Airflow CFM	ESP in H_2O	Watts 1P	Watts 3P
225	1.25	335	181
375	0.89	464	333
420	0.75	518	394
480	0.50	584	472
500	0.43	600	491
540	0.25	640	540
575	0.00	690	610

Note: Watts is for the entire unit.
Note: Airflow performance includes effect of clean, standard filter supplied with unit.

Specifications may be subject to change without notice.

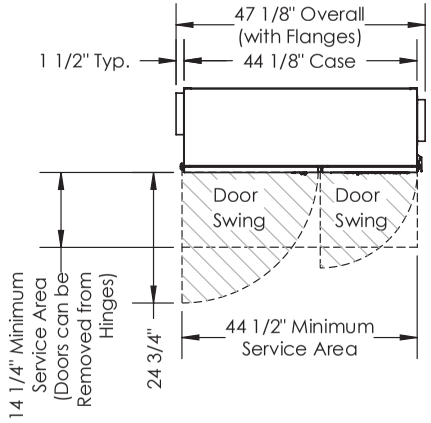

TOP VIEW

ABBREVIATIONS
EA: Exhaust Air to outside
OA: Outside Air intake
RA: Room Air to be exhausted
FA: Fresh Air to inside

INSTALLATION ORIENTATION
Unit may be installed in any orientation.

NOTE
1. UNLESS OTHERWISE SPECIFIED, DIMENSIONS ARE ROUNDED TO THE NEAREST EIGHTH OF AN INCH.

2. SPECIFICATIONS MAY BE SUBJECT TO CHANGE WITHOUT NOTICE.

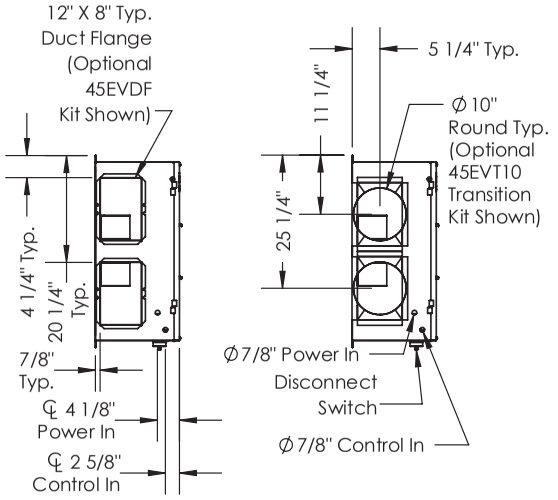

LEFT VIEW

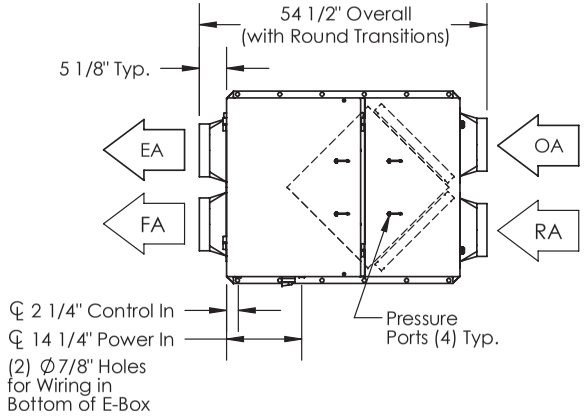

FRONT VIEW

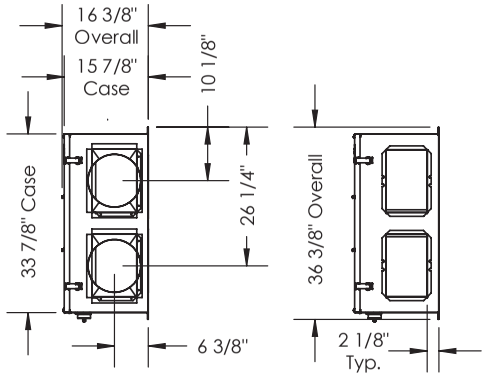

RIGHT VIEW

AIRFLOW CONFIGURATION
Available as shown in dimension drawing.

UNIT MOUNTING & APPLICATION
Can be mounted in any orientation. RA/EA airstream can be switched with OA/FA airstream.

EV 450IN

Energy Recovery Ventilator
EC Motor Option

INDOOR UNIT

Download specification at:
renewaire.com/specifications

SPECIFICATIONS

Ventilation Type:
Static plate, heat and humidity transfer

Typical Airflow Range: 200-530 CFM

AHRI 1060 Certified Core: One L85-G5

Standard Features:
Non-fused disconnect
24 VAC transformer/relay package
Cross-core differential pressure ports

Filters:
Total qty. 2, MERV 8: 14" x 20" x 2"

Unit Dimensions & Weight:
54 1/2" L x 16 3/8" W x 36 3/4" H
140-202 lbs., varies by option(s)

Max. Shipping Dimensions & Weight (on pallet):
62" L x 42" W x 22" H
250 lbs.

Motor(s):
Qty. 1, 0.5 HP, Direct drive EC blower/ motor package

Options:
Fused disconnect
Integrated programmable controls - enhanced, premium
Qty. 2, Factory mounted filter alarms - both airstreams
Double wall construction
Exterior paint - white, custom colors

Accessories:
Filters - MERV 13, 2" (shipped loose)
Backdraft damper 10"
Wall cap 10" - galvanized, paintable galvanneal
Vibration isolation kit
Hanging bracket kit
Transition kit - 10" round, qty. 2
Flange kit - rectangular 12" x 8", 2 flanges
Potentiometer speed control - remote installed
Digital time clock - wall mount (TC7D-W), in exterior enclosure (TC7D-E)
Carbon dioxide sensor/control - wall mount (CO2-W), duct mount (CO2-D)
IAQ sensor - wall mount (IAQ-W), duct mount (IAQ-D)
Motion occupancy sensor/control - ceiling mount (MC-C), wall mount (MC-W)
Smoke Detector - duct mount (SD-D)
Louver with 10" round duct connection - 12" (W) x 12" (H)
Electric duct heater - RH series (1-11.5 kW); EK series (1–175 kW); designed for indoor ductwork installation only

Note: Indirect Gas-Fired Duct Furnace is not available on the EV450IN.

EC MOTOR OPTION OPERATING RANGE

EV450IN EC MOTOR		
Sample Points Depicted in Larger Dots		
Airflow (CFM)	**External Static Pressure (Inches Water Column)**	**Unit Power Consumption (Watts)**
229	0.07	75
321	0.16	171
395	0.25	284
458	0.34	410
491	0.40	506
209	0.20	80
289	0.43	188
350	0.67	315
396	0.90	447
416	1.00	515

Note: Watts is for the entire unit.
Note: Airflow performance includes effect of clean, standard filter supplied with unit.

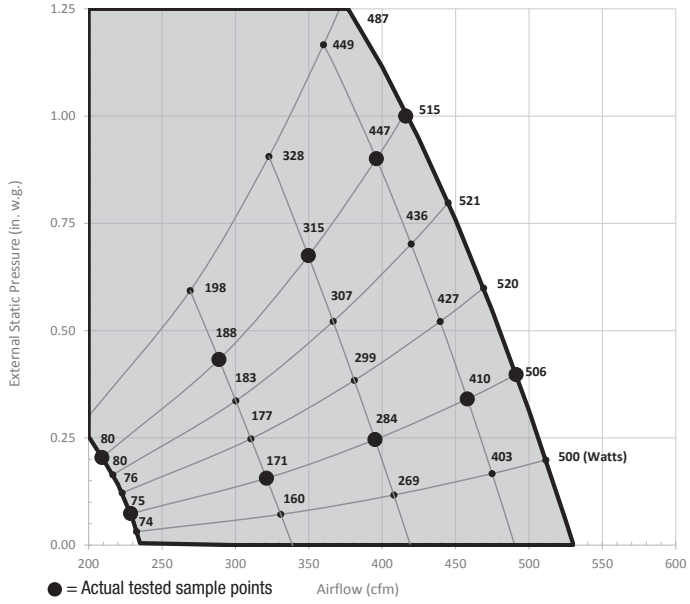

ELECTRICAL DATA

HP	Volts	HZ	Phase	FLA	Min. Cir. Amps	Max. Overcurrent Protection Device
0.5	120	60	Single	8.1	10.1	15
0.5	208-230	60	Single	4.8	6.0	15

Specifications may be subject to change without notice.

EV450IN Energy Recovery Ventilator EC Motor Option

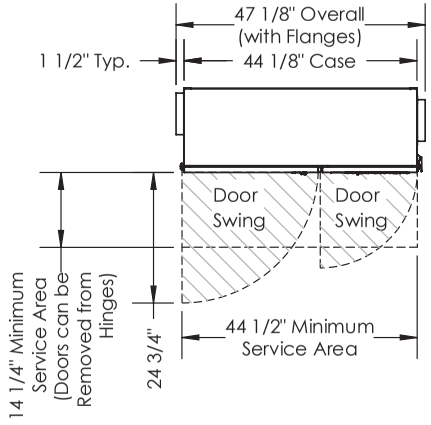

TOP VIEW

ABBREVIATIONS
EA: Exhaust Air to outside
OA: Outside Air intake
RA: Room Air to be exhausted
FA: Fresh Air to inside

INSTALLATION ORIENTATION
Unit may be installed in any orientation.

NOTE
1. UNLESS OTHERWISE SPECIFIED, DIMENSIONS ARE ROUNDED TO THE NEAREST EIGHTH OF AN INCH.

2. SPECIFICATIONS MAY BE SUBJECT TO CHANGE WITHOUT NOTICE.

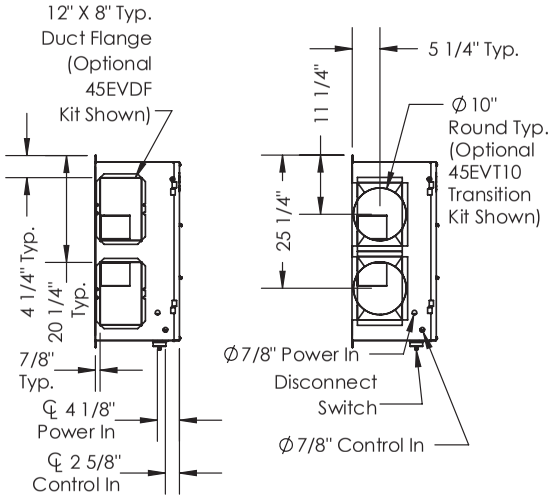

LEFT VIEW

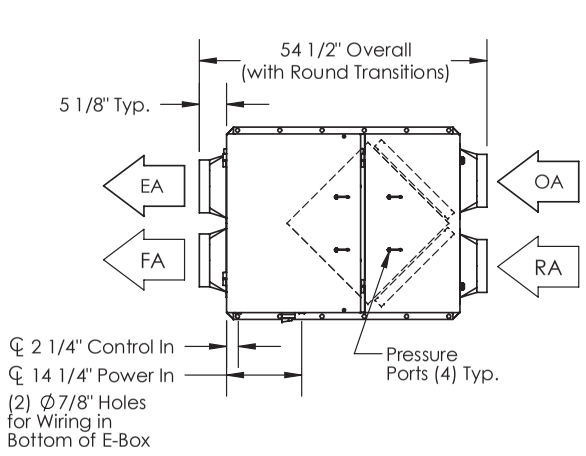

FRONT VIEW

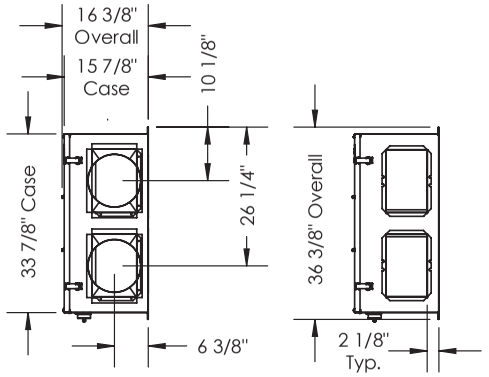

RIGHT VIEW

AIRFLOW CONFIGURATION
Available as shown in dimension drawing.

UNIT MOUNTING & APPLICATION
Can be mounted in any orientation. RA/EA airstream can be switched with OA/FA airstream.

EV 450RT

Energy Recovery Ventilator
Standard

ROOFTOP UNIT

Download specification at:
renewaire.com/specifications

SPECIFICATIONS

Ventilation Type:
Static plate, heat and humidity transfer

Typical Airflow Range: 240-500 CFM

AHRI 1060 Certified Core: One L85-G5

Standard Features:
Non-fused disconnect
24 VAC transformer/relay package

Filters:
Total qty. 2, MERV 8: 14" x 20" x 2"

Unit Dimensions & Weight:
75" L x 36 1/2" W x 19 1/4" H
184-243 lbs., varies by option(s)

Max. Shipping Dimensions & Weight (on pallet):
96" L x 47" W x 25" H
350 lbs.

Motor(s), choice of:
Qty. 1, 0.6 HP (standard single phase)
Qty. 1, 0.5 HP (standard three phase)

Options:
Qty. 1, Variable Speed/ECM - Direct Drive Motors (see EV450IN EC Motor submittal) - 0.5 HP, 120V/1Ph/60HZ, 0.5 HP, 208-230V/1Ph/60HZ
Fused disconnect
Integrated programmable controls - enhanced, premium
Qty. 2, Factory mounted filter alarms - both airstreams
Double wall construction
Exterior paint - white, custom colors

Accessories:
Filters - MERV 13, 2" (shipped loose)
Solid state speed control kit - 115V, qty. 1, 208-230V, qty. 1
RA/FA Horizontal plenum box - RTC/RTH configuration
RA/FA Vertical and horizontal plenum box - RTR/RTF configuration
Rooftop adapter transition paint - white, custom colors
Roof curb - standard 14"
Curb wind clip
Engineered combo curb for Carrier RTU
Engineered combo curb for Trane RTU
Digital time clock - wall mount (TC7D-W), in exterior enclosure (TC7D-E)
Carbon dioxide sensor/control - wall mount (CO2-W), duct mount (CO2-D)
IAQ sensor - wall mount (IAQ-W), duct mount (IAQ-D)
Motion occupancy sensor/control - ceiling mount (MC-C), wall mount (MC-W)
Smoke detector - duct mount (SD-D)
Electric duct heater - EK series (1–175 kW); designed for indoor ductwork installation only

Note: Indirect Gas-Fired Duct Furnace is not available on the EV450RT.

ELECTRICAL DATA

HP	Volts	HZ	Phase	FLA	Min. Cir. Amps	Max. Overcurrent Protection Device
0.6	120	60	Single	7.2	9.0	15
0.6	208-230	60	Single	3.9-3.6	4.9	15
0.6	277	60	Single	3.5	4.4	15
0.5	208-230	60	Three	1.7-1.5	2.1	15
0.5	460	60	Three	0.8	1.0	15

UNIT PERFORMANCE

Airflow CFM	ESP in H_2O	Watts 1P	Watts 3P
240	1.00	425	243
375	0.75	493	341
450	0.50	534	412
500	0.25	563	461
550	0.00	593	516

Note: Watts is for the entire unit.
Note: Airflow performance includes effect of clean, standard filter supplied with unit.

Specifications may be subject to change without notice.

EV450RT Energy Recovery Ventilator Standard

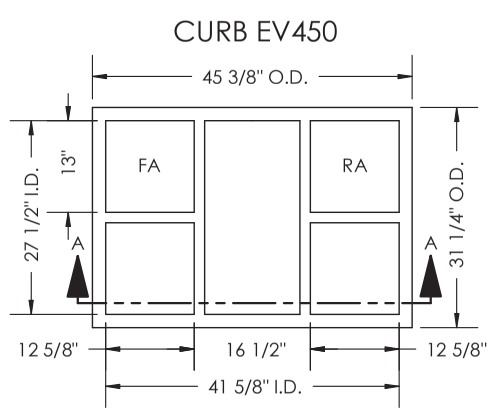

TOP VIEW

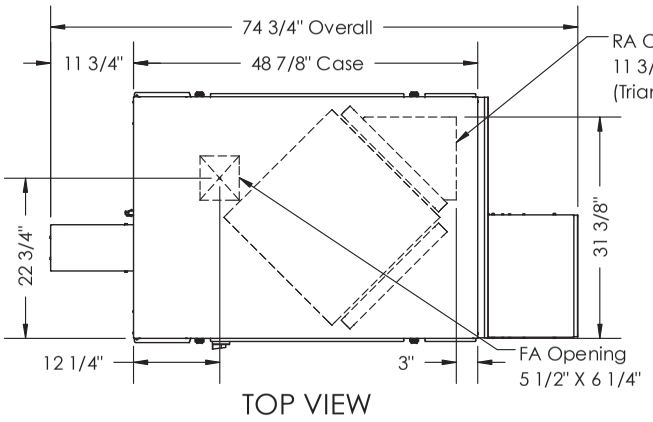

TOP VIEW

ABBREVIATION
EA: Exhaust Air to outside
OA: Outside Air intake
RA: Room Air to be exhausted
FA: Fresh Air to inside

INSTALLATION ORIENTATION
Unit must be installed in orientation shown.

NOTE:
1. UNLESS OTHERWISE SPECIFIED, DIMENSIONS ARE ROUNDED TO THE NEAREST EIGHTH OF AN INCH.

2. SPECIFICATIONS MAY BE SUBJECT TO CHANGE WITHOUT NOTICE.

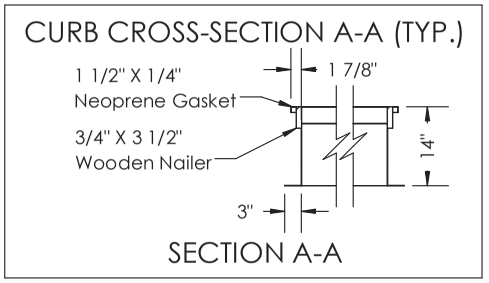

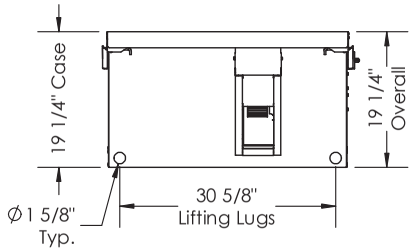

LEFT VIEW

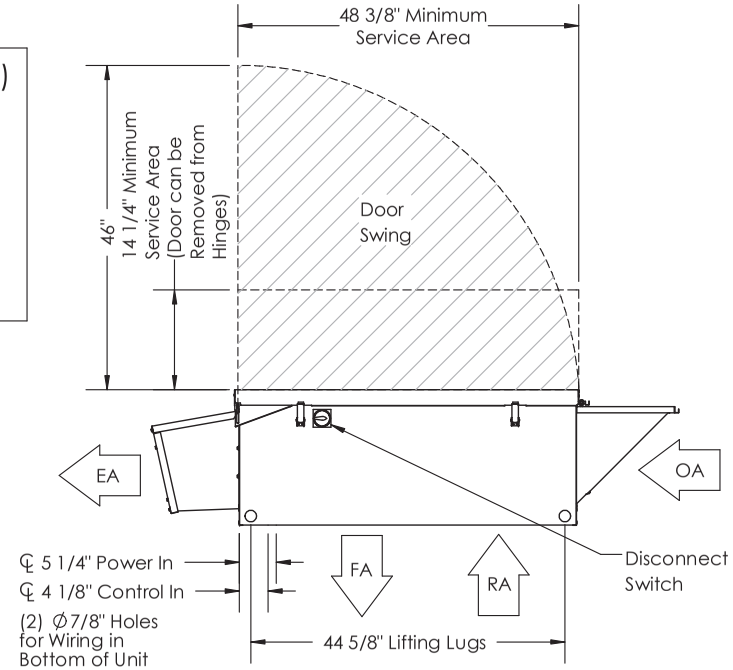

FRONT VIEW

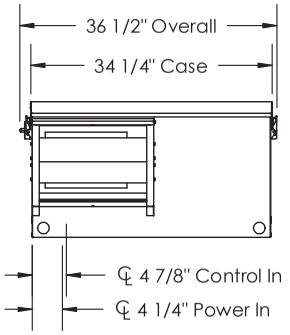

RIGHT VIEW

AIRFLOW CONFIGURATION
Available as shown in dimension drawing.

UNIT MOUNTING & APPLICATION
Must be mounted as shown. Airstreams can not be switched. Rooftop adapter accessories can be used to provide RTR and RTF (45RTRF) or RTH and RTC (45RTCH) airflow.

EV 450RT

Energy Recovery Ventilator
EC Motor Option

AHRI CERTIFIED® www.ahridirectory.org Globally Recognized. Industry Respected.

C ETL LISTED US Intertek

ROOFTOP UNIT

Download specification at:
renewaire.com/specifications

SPECIFICATIONS

Ventilation Type:
Static plate, heat and humidity transfer

Typical Airflow Range: 200-510 CFM

AHRI 1060 Certified Core: One L85-G5

Standard Features:
Non-fused disconnect
24 VAC transformer/relay package

Filters:
Total qty. 2, MERV 8: 14" x 20" x 2"

Unit Dimensions & Weight:
75" L x 36 1/2" W x 19 1/4" H
187-246 lbs., varies by option(s)

Max. Shipping Dimensions & Weight (on pallet):
96" L x 47" W x 25" H
350 lbs.

Motor(s):
Qty. 1, 0.5 HP, Direct drive EC blower/ motor package

Options:
Fused disconnect
Integrated programmable controls - enhanced, premium
Qty. 2, Factory mounted filter alarms - both airstreams
Double wall construction
Exterior paint - white, custom colors

Accessories:
Filters - MERV 13, 2" (shipped loose)
Potentiometer speed control - remote installed
RA/FA Horizontal plenum box - RTC/RTH configuration
RA/FA Vertical and horizontal plenum box - RTR/RTF configuration
Rooftop adapter transition paint - white, custom colors
Roof curb - standard 14"
Curb wind clip
Engineered combo curb for Trane RTU
Engineered combo curb for Carrier RTU
Digital time clock - wall mount (TC7D-W), in exterior enclosure (TC7D-E)
Carbon dioxide sensor/control - wall mount (CO2-W), duct mount (CO2-D)
IAQ sensor - wall mount (IAQ-W), duct mount (IAQ-D)
Motion occupancy sensor/control - ceiling mount (MC-C), wall mount (MC-W)
Smoke Detector - duct mount (SD-D)
Electric duct heater - EK series (1–175 kW); designed for indoor ductwork installation only

Note: Indirect Gas-Fired Duct Furnace is not available on the EV450RT.

EC MOTOR OPTION OPERATING RANGE

EV450RT EC MOTOR		
Sample Points Depicted in Larger Dots		
Airflow (CFM)	**External Static Pressure (Inches Water Column)**	**Unit Power Consumption (Watts)**
217	0.07	78
305	0.16	180
375	0.25	301
435	0.34	426
467	0.40	520
200	0.20	85
274	0.43	196
332	0.67	324
376	0.90	451
395	1.00	502

Note: Watts is for the entire unit.
Note: Airflow performance includes effect of clean, standard filter supplied with unit.

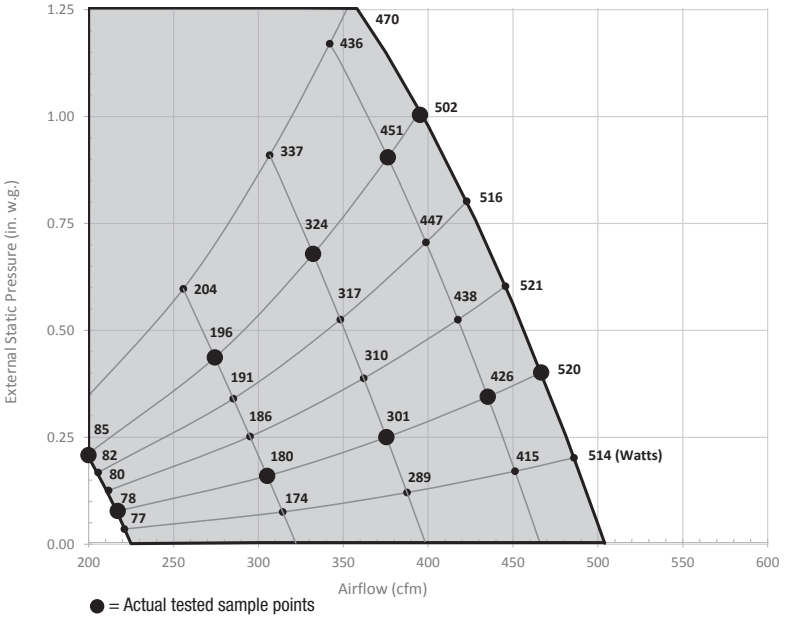

ELECTRICAL DATA

HP	Volts	HZ	Phase	FLA	Min. Cir. Amps	Max. Overcurrent Protection Device
0.5	120	60	Single	8.1	10.1	15
0.5	208-230	60	Single	4.8	6.0	15

Specifications may be subject to change without notice.

RenewAire® Energy Recovery Ventilation

EV450RT Energy Recovery Ventilator EC Motor Option

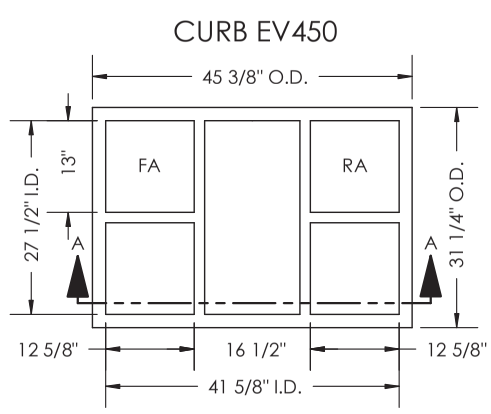

TOP VIEW

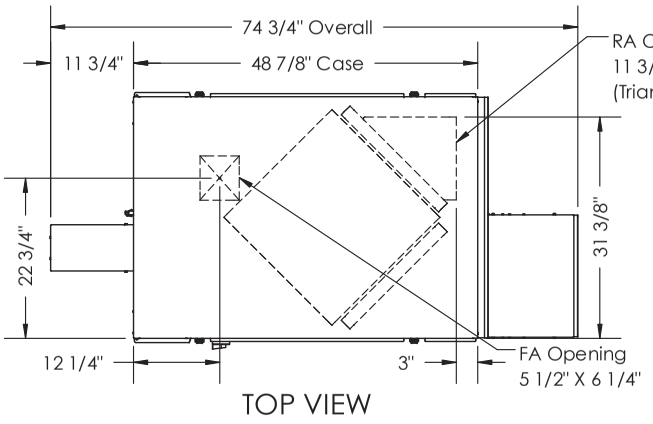

TOP VIEW

ABBREVIATION
EA: Exhaust Air to outside
OA: Outside Air intake
RA: Room Air to be exhausted
FA: Fresh Air to inside

INSTALLATION ORIENTATION
Unit must be installed in orientation shown.

NOTE:
1. UNLESS OTHERWISE SPECIFIED, DIMENSIONS ARE ROUNDED TO THE NEAREST EIGHTH OF AN INCH.

2. SPECIFICATIONS MAY BE SUBJECT TO CHANGE WITHOUT NOTICE.

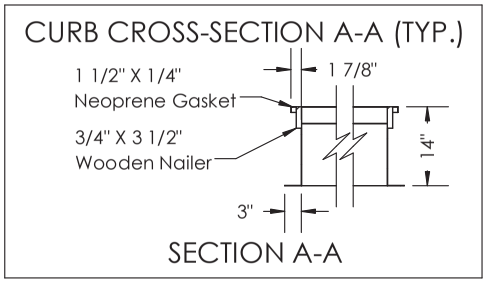

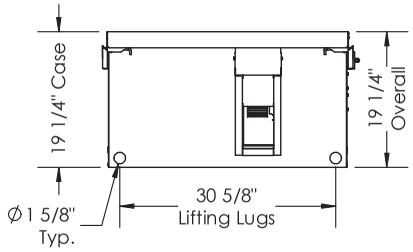

LEFT VIEW

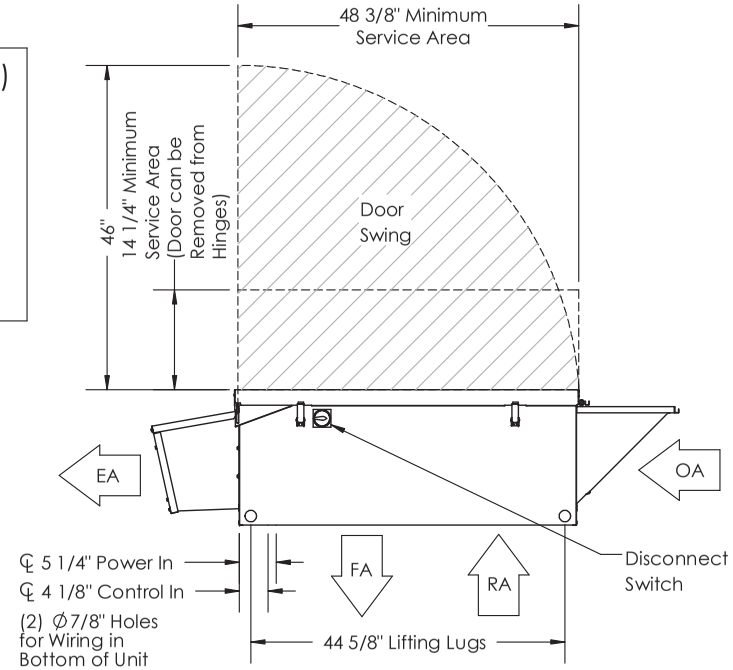

FRONT VIEW

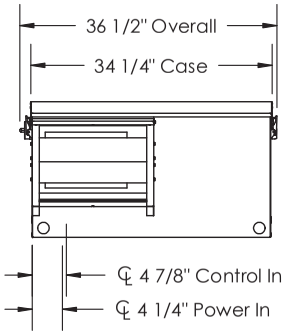

RIGHT VIEW

AIRFLOW CONFIGURATION
Available as shown in dimension drawing.

UNIT MOUNTING & APPLICATION
Must be mounted as shown. Airstreams can not be switched. Rooftop adapter accessories can be used to provide RTR and RTF (45RTRF) or RTH and RTC (45RTCH) airflow.

EV 450RT

Energy Recovery Ventilator
Standard or EC Motor Option

DUCTING ACCESSORIES

Rooftop Curb (45Curb)

Standard roof curb shown (available option).

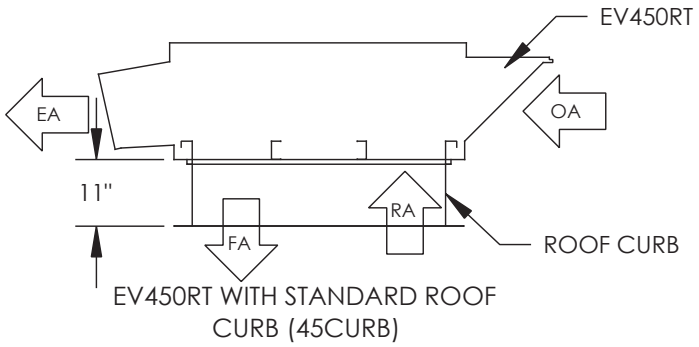

EV450RT WITH STANDARD ROOF CURB (45CURB)

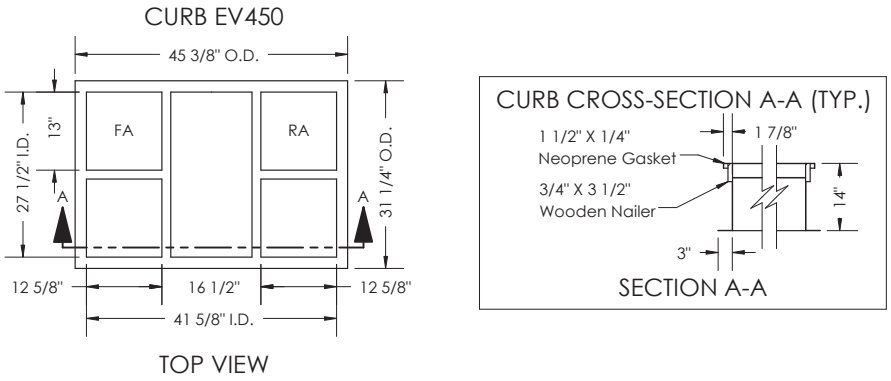

Rooftop Adapter for RTR and RTF Orientations

For horizontal connection of either the Fresh Air duct or the Return Air duct, stack the optional RTF/RTR Adapter on the standard roof curb. Duct openings to be field cut into adapter. Opening location and size is flexible.

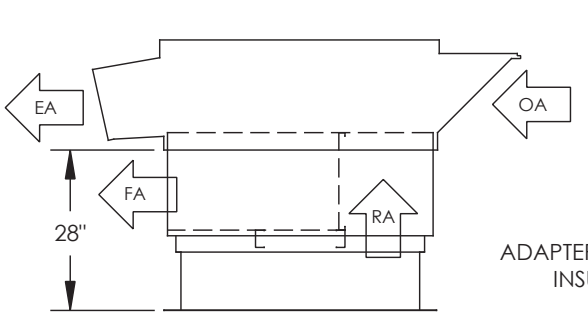

EV450RT WITH RTF/RTR ADAPTER (45RTRF) AND CURB (45CURB) IN RTR CONFIGURATION

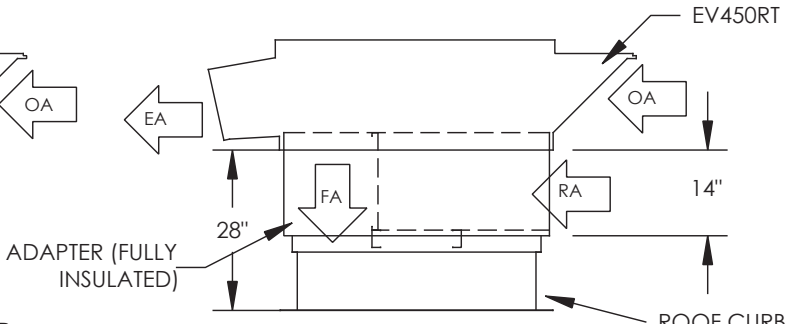

EV450RT WITH RTF/RTR ADAPTER (45RTRF) AND CURB (45CURB) IN RTF CONFIGURATION

Specifications may be subject to change without notice.

RenewAire Energy Recovery Ventilation

Rooftop Adapter for RTC and RTH Orientations

The RTH/RTC Adapter allows horizontal connection of both the Fresh Air and the Return Air ducts. It is also possible to connect the adapter directly to the return plenum of most rooftop units (openings must be cut into RTU). Duct openings to be field cut into adapter. Opening location and size is flexible.

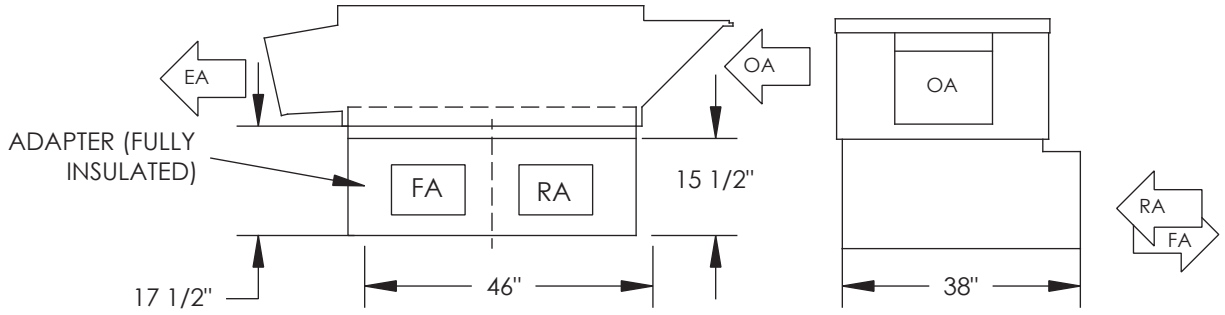

EV450RT WITH ADAPTER (45RTCH)

ABBREVIATIONS

EA: Exhaust Air to outdoors
OA: Outdoor Air intake
RA: Room Air to be exhausted
FA: Fresh Air to inside

HE 1XINH

Energy Recovery Ventilator
Standard

INDOOR UNIT

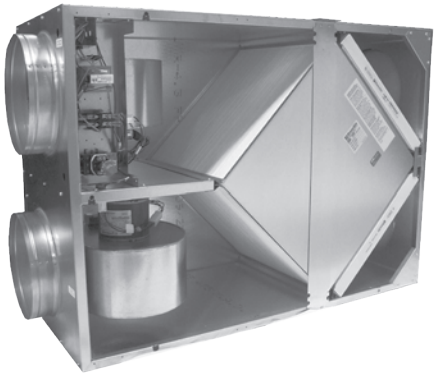

Download specification at:
renewaire.com/specifications

SPECIFICATIONS

Ventilation Type:
Static plate, heat and humidity transfer

Typical Airflow Range: 250-925 CFM

AHRI 1060 Certified Core: One L125-G5

Standard Features:
Non-fused disconnect
24 VAC transformer/relay package
Cross-core differential pressure ports

Filters:
Total qty. 2, MERV 8: 20" x 20" x 2"

Unit Dimensions & Weight:
54 3/4" L x 23 3/4" W x 35 3/4" H
204-275 lbs., varies by option(s)

Max. Shipping Dimensions & Weight (on pallet):
63" L x 30" W x 56" H
325 lbs.
Accessories box shipped loose on top of unit.

Motor(s):
Qty. 2, 0.75 HP ea., Direct drive blower/standard motor packages

Options:
Qty. 2, Variable Speed/ECM - Direct Drive Motors (see HE1XINH EC Motor submittal) - 0.5 HP, 120V/1Ph/60HZ, 0.5 HP, 208-230V/1Ph/60HZ
Independent blower control
Fused disconnect
Integrated programmable controls - enhanced, premium
Bypass economizer damper (see bypass DIM drawing) - dry-bulb temperature controls (standard), enthalpy controls (option)
Low-leakage motorized isolation dampers - OA, RA or both airstreams
Qty. 2, Factory mounted filter alarms - both airstreams
Double wall construction
Exterior paint - white, custom colors

Accessories:
Filters - MERV 13, 2" (shipped loose)
Backdraft damper 12"
Motorized isolation damper - both airstreams
Wall cap 12" - galvanized, paintable galvanneal
Solid state speed control kit - 115V, 208-230V (1 required per motor)
Digital time clock - wall mount (TC7D-W), in exterior enclosure (TC7D-E)
Carbon dioxide sensor/control - wall mount (CO2-W), duct mount (CO2-D)
IAQ sensor - wall mount (IAQ-W), duct mount (IAQ-D)
Motion occupancy sensor/control - ceiling mount (MC-C), wall mount (MC-W)
Smoke Detector - duct mount (SD-D)
Electric duct heater - RH series (1-11.5 kW); EK series (1–175 kW); designed for indoor ductwork installation only
Indirect gas-fired duct furnace - GH series (50-400 MBH), installed downstream of any fans

AIRFLOW PERFORMANCE

Motor HP Phase	External Static Pressure (Inches Water Column)						
	0.0	0.25	0.5	0.75	0.9	1.25	1.5
0.75 Single Phase	970 CFM 1,490 Watts	925 CFM 1,375 Watts	860 CFM 1,270 Watts	795 CFM 1,160 Watts	750 CFM 1,090 Watts	635 CFM 950 Watts	480 CFM 825 Watts
0.75 Three Phase	970 CFM 1,246 Watts	925 CFM 1,158 Watts	860 CFM 1,039 Watts	795 CFM 928 Watts	750 CFM 856 Watts	635 CFM 691 Watts	480 CFM 509 Watts

Note: Watts is for the entire unit (two motors).

Note: Airflow performance includes effect of clean, standard filter supplied with unit.

ELECTRICAL DATA

HP	Volts	HZ	Phase	FLA per motor	Min. Cir. Amps	Max. Overcurrent Protection Device
0.75	120	60	Single	9.0	20.3	25
0.75	208-230	60	Single	4.5	10.1	15
0.75	277	60	Single	3.9	8.8	15
0.75	208-230	60	Three	1.7-2.3	5.2	15
0.75	460	60	Three	1.15	2.6	15

Specifications may be subject to change without notice.

HE1XINH Energy Recovery Ventilator Standard

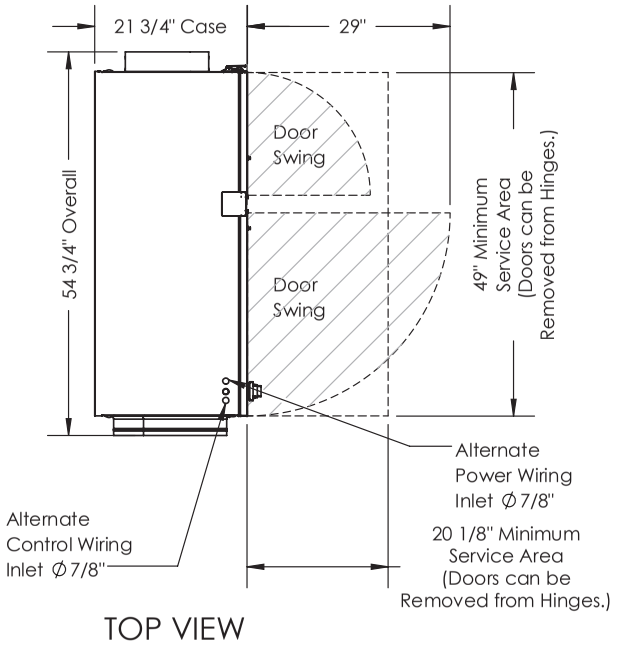

TOP VIEW

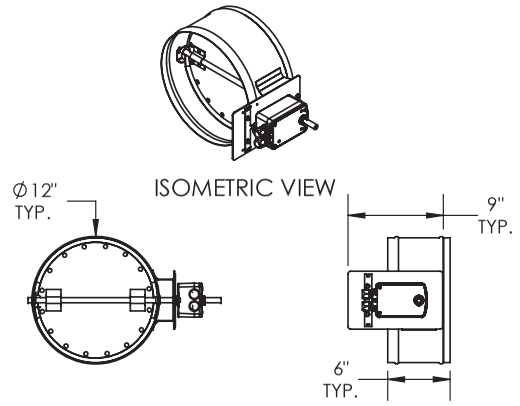

(OA/RA) DAMPER OPTION (QTY.2)
(SHIPPED LOOSE)
SCALE 1:16

ABBREVIATIONS
EA: Exhaust Air to Outside
OA: Outside Air Intake
RA: Room Air to be Exhausted
FA: Fresh Air to Inside

INSTALLATION ORIENTATION
Unit may be installed in any orientation.

NOTE
1. UNLESS OTHERWISE SPECIFIED, DIMENSIONS ARE ROUNDED TO THE NEAREST EIGHTH OF AN INCH.

2. SPECIFICATIONS MAY BE SUBJECT TO CHANGE WITHOUT NOTICE.

3.DAMPERS SHIPPED LOOSE, FIELD INSTALLATION REQUIRED.

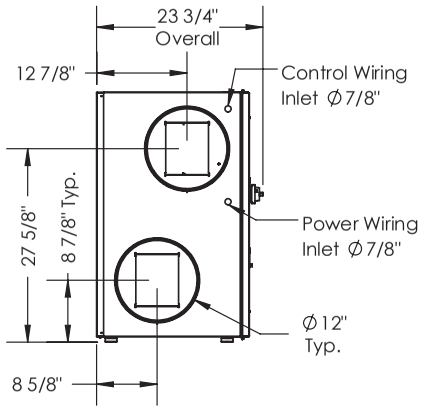

LEFT VIEW

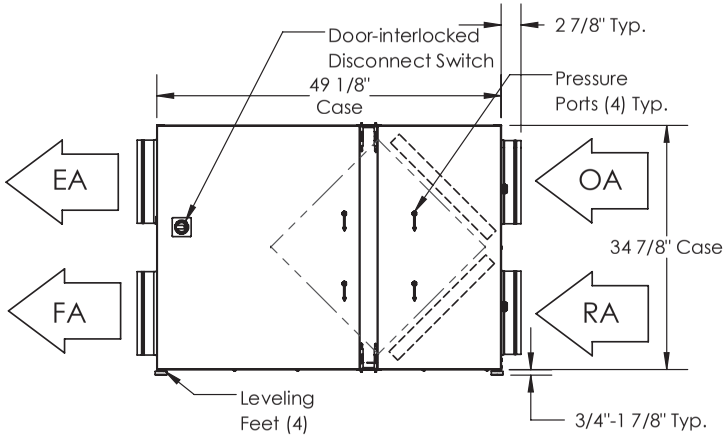

FRONT VIEW

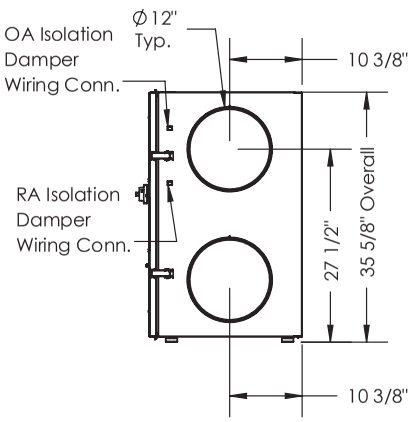

RIGHT VIEW

AIRFLOW CONFIGURATION
Available as shown in dimension drawing.

UNIT MOUNTING & APPLICATION
Can be mounted in any orientation. RA/EA airstream can be switched with OA/FA airstream unless certain options are selected.

HE 1XINH

Energy Recovery Ventilator
EC Motor Option

AHRI CERTIFIED www.ahridirectory.org Globally Recognized. Industry Respected.

C ETL LISTED US Intertek

INDOOR UNIT

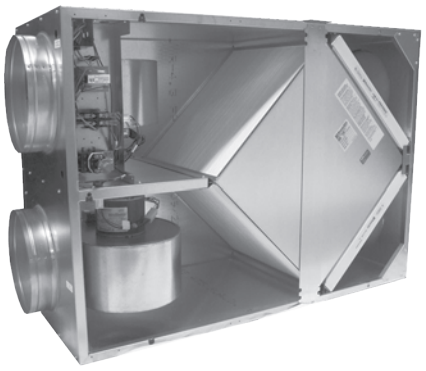

Download specification at:
renewaire.com/specifications

SPECIFICATIONS

Ventilation Type:
Static plate, heat and humidity transfer

Typical Airflow Range: 250-1,100 CFM

AHRI 1060 Certified Core: One L125-G5

Standard Features:
Non-fused disconnect
24 VAC transformer/relay package
Cross-core differential pressure ports

Filters:
Total qty. 2, MERV 8: 20" x 20" x 2"

Unit Dimensions & Weight:
54 3/4" L x 23 3/4" W x 35 3/4" H
207-278 lbs., varies by option(s)

Max. Shipping Dimensions & Weight (on pallet):
63" L x 30" W x 56" H
325 lbs.
Accessories box shipped loose on top of unit.

Motor(s):
Qty. 2, 0.5 HP ea., Direct drive EC blower/ motor packages

Options:
Fused disconnect
Integrated programmable controls - enhanced, premium
Bypass economizer damper (see bypass DIM drawing) - dry-bulb temperature controls (standard), enthalpy controls (option)
Low-leakage motorized isolation dampers - OA, RA or both airstreams
Qty. 2, Factory mounted filter alarms - both airstreams
Double wall construction
Exterior paint - white, custom colors

Accessories:
Filters - MERV 13, 2" (shipped loose)
Backdraft damper 12"
Motorized isolation damper - both airstreams
Wall cap 12" - galvanized, paintable galvanneal
Potentiometer speed control - remote installed
Digital time clock - wall mount (TC7D-W), in exterior enclosure (TC7D-E)
Carbon dioxide sensor/control - wall mount (CO2-W), duct mount (CO2-D)
IAQ sensor - wall mount (IAQ-W), duct mount (IAQ-D)
Motion occupancy sensor/control - ceiling mount (MC-C), wall mount (MC-W)
Smoke Detector - duct mount (SD-D)
Electric duct heater - RH series (1-11.5 kW); EK series (1–175 kW); designed for indoor ductwork installation only
Indirect gas-fired duct furnace - GH series (50-400 MBH), installed downstream of any fans

EC MOTOR OPTION OPERATING RANGE

HE1XINH EC MOTOR		
Sample Points Depicted in Larger Dots		
Airflow (CFM)	External Static Pressure (Inches Water Column)	Unit Power Consumption (Watts)
324	0.04	86
446	0.07	150
647	0.15	300
794	0.24	564
929	0.33	827
1019	0.41	1042
300	0.11	91
406	0.20	160
579	0.42	359
713	0.65	599
828	0.89	871
883	1.00	1075

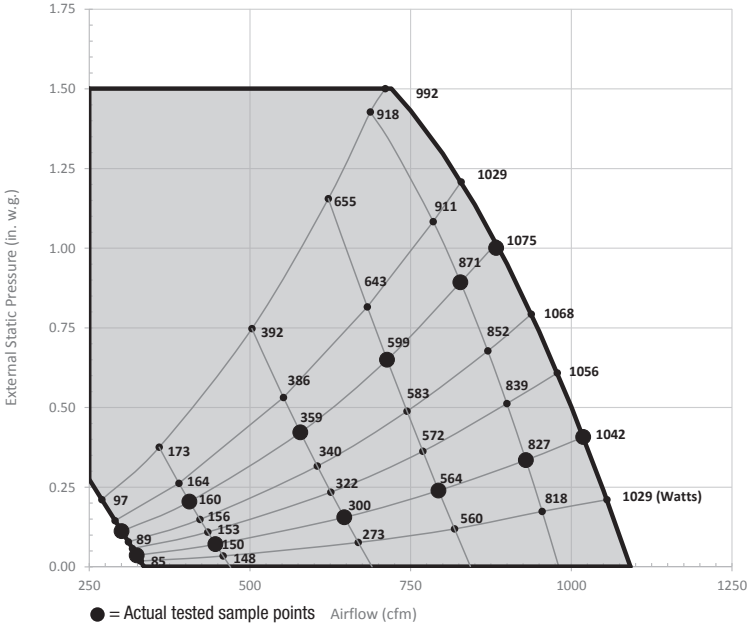

Note: Watts is for the entire unit.
Note: Airflow performance includes effect of clean, standard filter supplied with unit.

ELECTRICAL DATA

HP	Volts	HZ	Phase	FLA per motor	Min. Cir. Amps	Max. Overcurrent Protection Device
0.5	120	60	Single	8.1	18.2	25
0.5	208-230	60	Single	4.8	10.8	15

Specifications may be subject to change without notice.

RenewAire Energy Recovery Ventilation

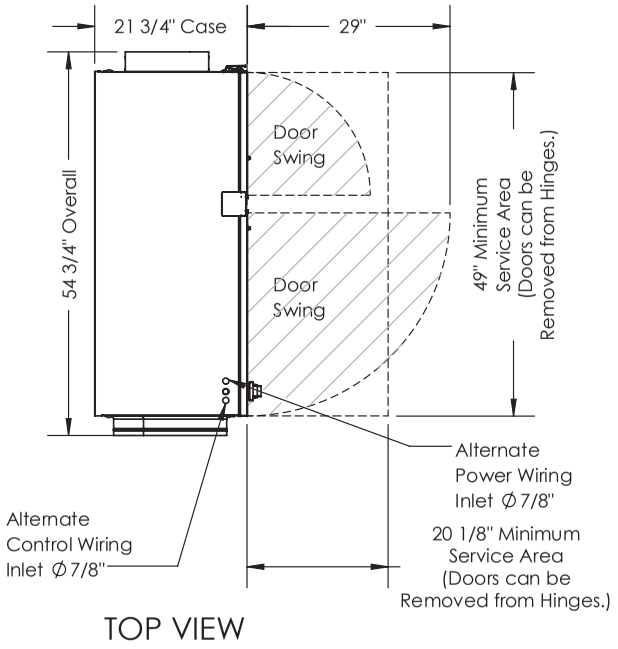

TOP VIEW

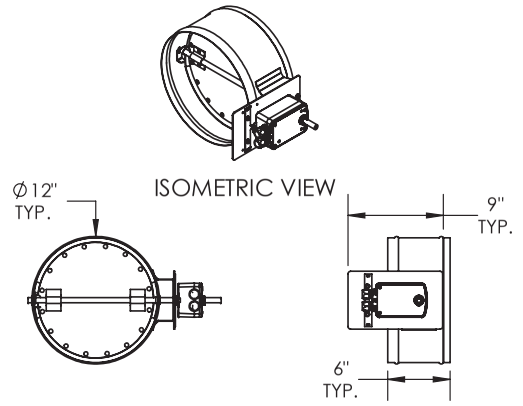

(OA/RA) DAMPER OPTION (QTY.2)
(SHIPPED LOOSE)
SCALE 1:16

ABBREVIATIONS
EA: Exhaust Air to Outside
OA: Outside Air Intake
RA: Room Air to be Exhausted
FA: Fresh Air to Inside

INSTALLATION ORIENTATION
Unit may be installed in any orientation.

NOTE
1. UNLESS OTHERWISE SPECIFIED, DIMENSIONS ARE ROUNDED TO THE NEAREST EIGHTH OF AN INCH.

2. SPECIFICATIONS MAY BE SUBJECT TO CHANGE WITHOUT NOTICE.

3.DAMPERS SHIPPED LOOSE, FIELD INSTALLATION REQUIRED.

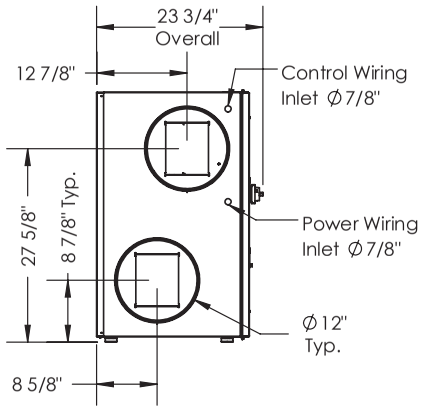

LEFT VIEW

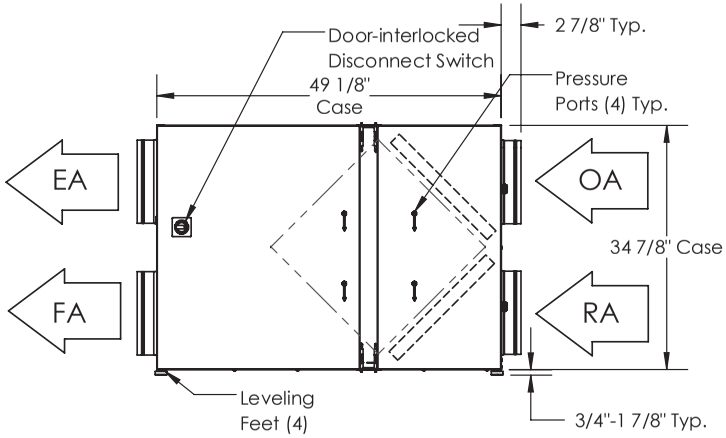

FRONT VIEW

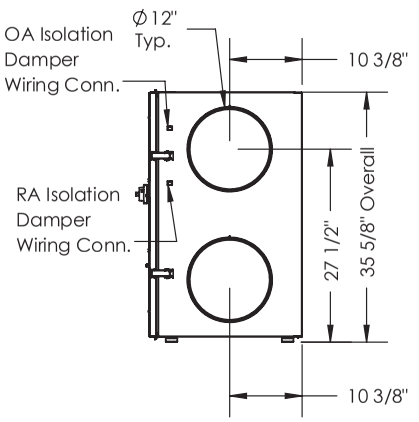

RIGHT VIEW

AIRFLOW CONFIGURATION
Available as shown in dimension drawing.

UNIT MOUNTING & APPLICATION
Can be mounted in any orientation. RA/EA airstream can be switched with OA/FA airstream unless certain options are selected.

HE 1XINH

Energy Recovery Ventilator
Standard with Bypass Economizer

INDOOR UNIT

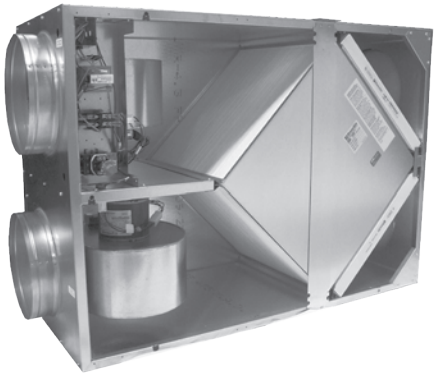

Download specification at:
renewaire.com/specifications

SPECIFICATIONS

Ventilation Type:
Static plate, heat and humidity transfer

Typical Airflow Range: 250-925 CFM

AHRI 1060 Certified Core: One L125-G5

Standard Features:
Non-fused disconnect
24 VAC transformer/relay package
Cross-core differential pressure ports

Filters:
Total qty. 2, MERV 8: 20" x 20" x 2"

Unit Dimensions & Weight:
54 3/4" L x 23 3/4" W x 35 3/4" H
204-275 lbs., varies by option(s)

Max. Shipping Dimensions & Weight (on pallet):
63" L x 30" W x 56" H
325 lbs.
Accessories box shipped loose on top of unit.

Motor(s):
Qty. 2, 0.75 HP ea., Direct drive blower/standard motor packages

Options:
Qty. 2, Variable Speed/ECM - Direct Drive Motors (see HE1XINH EC Motor submittal) - 0.5 HP, 120V/1Ph/60HZ, 0.5 HP, 208-230V/1Ph/60HZ
Independent blower control
Fused disconnect
Integrated programmable controls - enhanced, premium
Bypass economizer damper (see bypass DIM drawing) - dry-bulb temperature controls (standard), enthalpy controls (option)
Low-leakage motorized isolation dampers - OA, RA or both airstreams
Qty. 2, Factory mounted filter alarms - both airstreams
Double wall construction
Exterior paint - white, custom colors

Accessories:
Filters - MERV 13, 2" (shipped loose)
Backdraft damper 12"
Motorized isolation damper - both airstreams
Wall cap 12" - galvanized, paintable galvanneal
Solid state speed control kit - 115V, 208-230V (1 required per motor)
Digital time clock - wall mount (TC7D-W), in exterior enclosure (TC7D-E)
Carbon dioxide sensor/control - wall mount (CO2-W), duct mount (CO2-D)
IAQ sensor - wall mount (IAQ-W), duct mount (IAQ-D)
Motion occupancy sensor/control - ceiling mount (MC-C), wall mount (MC-W)
Smoke Detector - duct mount (SD-D)
Electric duct heater - RH series (1-11.5 kW); EK series (1–175 kW); designed for indoor ductwork installation only
Indirect gas-fired duct furnace - GH series (50-400 MBH), installed downstream of any fans

AIRFLOW PERFORMANCE

Motor HP Phase	External Static Pressure (Inches Water Column)						
	0.0	0.25	0.5	0.75	0.9	1.25	1.5
0.75 Single Phase	970 CFM 1,490 Watts	925 CFM 1,375 Watts	860 CFM 1,270 Watts	795 CFM 1,160 Watts	750 CFM 1,090 Watts	635 CFM 950 Watts	480 CFM 825 Watts
0.75 Three Phase	970 CFM 1,246 Watts	925 CFM 1,158 Watts	860 CFM 1,039 Watts	795 CFM 928 Watts	750 CFM 856 Watts	635 CFM 691 Watts	480 CFM 509 Watts

Note: Watts is for the entire unit (two motors).

Note: Airflow performance includes effect of clean, standard filter supplied with unit.

ELECTRICAL DATA

HP	Volts	HZ	Phase	FLA per motor	Min. Cir. Amps	Max. Overcurrent Protection Device
0.75	120	60	Single	9.0	20.3	25
0.75	208-230	60	Single	4.5	10.1	15
0.75	277	60	Single	3.9	8.8	15
0.75	208-230	60	Three	1.7-2.3	5.2	15
0.75	460	60	Three	1.15	2.6	15

Specifications may be subject to change without notice.

HE1XINH Energy Recovery Ventilator Standard with Bypass Economizer

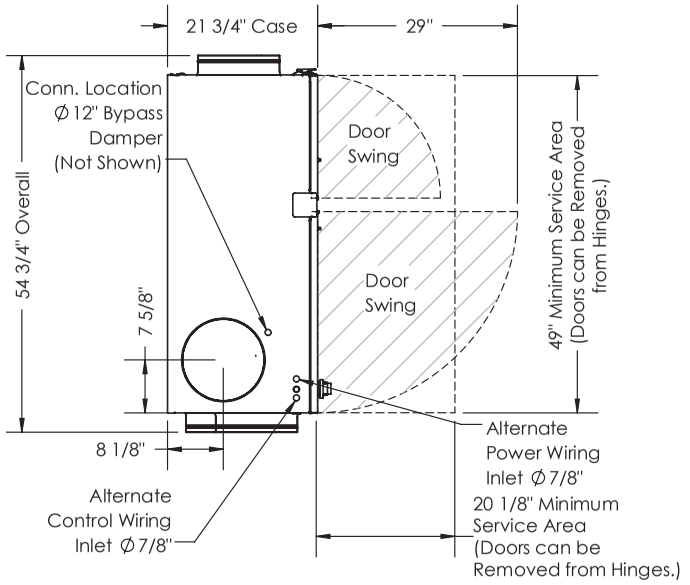

TOP VIEW

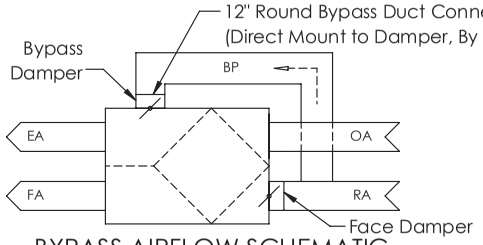

BYPASS AIRFLOW SCHEMATIC
FRONT VIEW

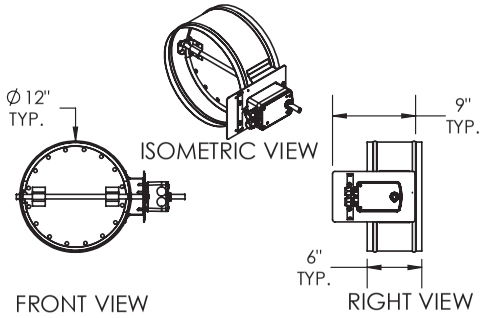

(OA/RA/BP) DAMPER OPTION (QTY.3)
(SHIPPED LOOSE)
SCALE 1:18

ABBREVIATIONS
EA: Exhaust Air to Outside
OA: Outside Air Intake
RA: Room Air to be Exhausted
FA: Fresh Air to Inside
BP: Bypass Air Intake

INSTALLATION ORIENTATION
Unit may be installed in any orientation.

NOTE
1. UNLESS OTHERWISE SPECIFIED, DIMENSIONS ARE ROUNDED TO THE NEAREST EIGHTH OF AN INCH.

2. SPECIFICATIONS MAY BE SUBJECT TO CHANGE WITHOUT NOTICE.

3. UNITS WITH BYPASS WILL REQUIRE ADDITIONAL SPACE FOR THE CONNECTION OF THE BYPASS DUCT (BY OTHERS).

4. FOR INSTALLATION DETAILS, REFER TO I&O MANUAL SUPPLEMENT FOR BYPASS.

5. DAMPERS SHIPPED LOOSE, FIELD INSTALLATION REQUIRED

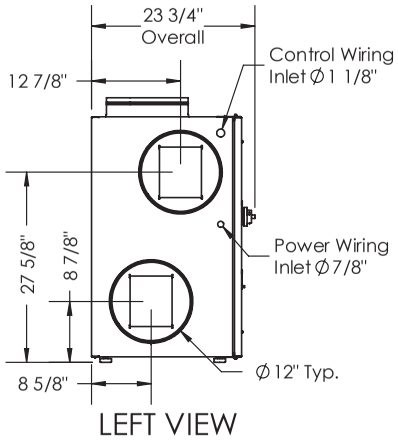

LEFT VIEW

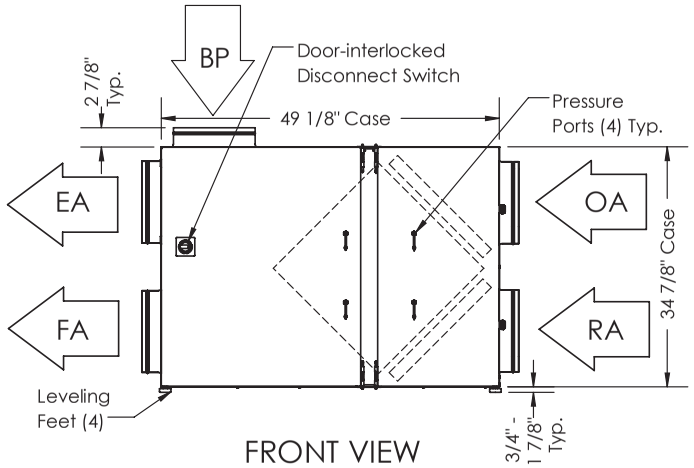

FRONT VIEW

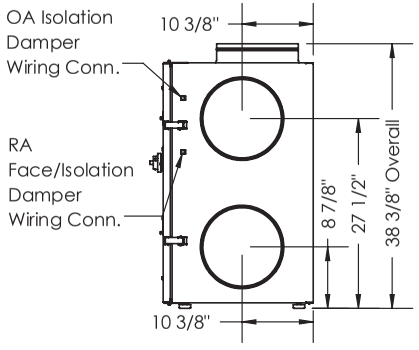

RIGHT VIEW

AIRFLOW CONFIGURATION
Available as shown in dimension drawing.

UNIT MOUNTING & APPLICATION
Can be mounted in any orientation. Airstreams can not be switched.

HE 1XINH

Energy Recovery Ventilator
EC Motor with Bypass Economizer

AHRI CERTIFIED www.ahridirectory.org Globally Recognized. Industry Respected.

C ETL LISTED US Intertek

INDOOR UNIT

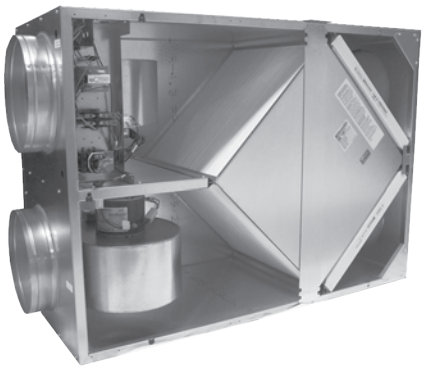

Download specification at:
renewaire.com/specifications

SPECIFICATIONS

Ventilation Type:
Static plate, heat and humidity transfer

Typical Airflow Range: 250-1,100 CFM

AHRI 1060 Certified Core: One L125-G5

Standard Features:
Non-fused disconnect
24 VAC transformer/relay package
Cross-core differential pressure ports

Filters:
Total qty. 2, MERV 8: 20" x 20" x 2"

Unit Dimensions & Weight:
54 3/4" L x 23 3/4" W x 35 3/4" H
207-278 lbs., varies by option(s)

Max. Shipping Dimensions & Weight (on pallet):
63" L x 30" W x 56" H
325 lbs.
Accessories box shipped loose on top of unit.

Motor(s):
Qty. 2, 0.5 HP ea., Direct drive EC blower/ motor packages

Options:
Fused disconnect
Integrated programmable controls - enhanced, premium
Bypass economizer damper (see bypass DIM drawing) - dry-bulb temperature controls (standard), enthalpy controls (option)
Low-leakage motorized isolation dampers - OA, RA or both airstreams
Qty. 2, Factory mounted filter alarms - both airstreams
Double wall construction
Exterior paint - white, custom colors

Accessories:
Filters - MERV 13, 2" (shipped loose)
Backdraft damper 12"
Motorized isolation damper - both airstreams
Wall cap 12" - galvanized, paintable galvanneal
Potentiometer speed control - remote installed
Digital time clock - wall mount (TC7D-W), in exterior enclosure (TC7D-E)
Carbon dioxide sensor/control - wall mount (CO2-W), duct mount (CO2-D)
IAQ sensor - wall mount (IAQ-W), duct mount (IAQ-D)
Motion occupancy sensor/control - ceiling mount (MC-C), wall mount (MC-W)
Smoke Detector - duct mount (SD-D)
Electric duct heater - RH series (1-11.5 kW); EK series (1–175 kW); designed for indoor ductwork installation only
Indirect gas-fired duct furnace - GH series (50-400 MBH), installed downstream of any fans

EC MOTOR OPTION OPERATING RANGE

HE1XINH EC MOTOR		
Sample Points Depicted in Larger Dots		
Airflow (CFM)	External Static Pressure (Inches Water Column)	Unit Power Consumption (Watts)
324	0.04	86
446	0.07	150
647	0.15	300
794	0.24	564
929	0.33	827
1019	0.41	1042
300	0.11	91
406	0.20	160
579	0.42	359
713	0.65	599
828	0.89	871
883	1.00	1075

Note: Watts is for the entire unit.
Note: Airflow performance includes effect of clean, standard filter supplied with unit.

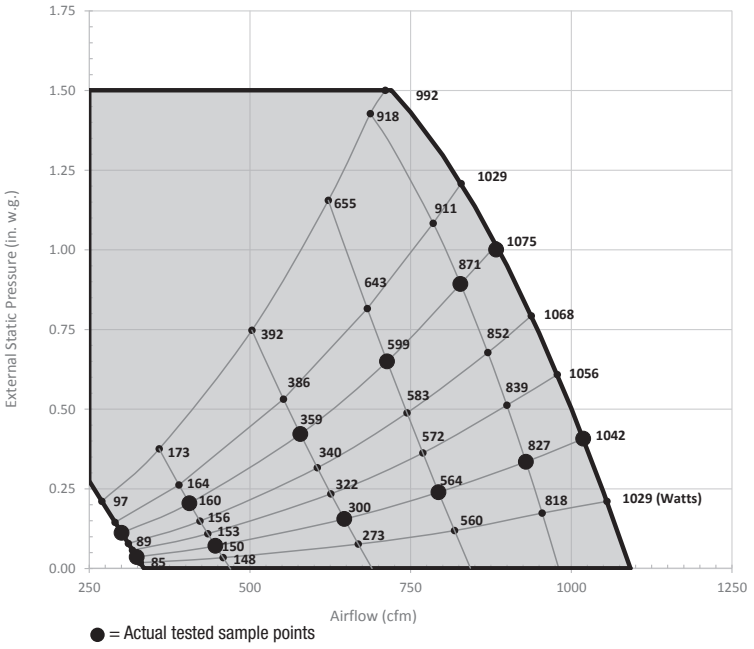

● = Actual tested sample points

ELECTRICAL DATA

HP	Volts	HZ	Phase	FLA per motor	Min. Cir. Amps	Max. Overcurrent Protection Device
0.5	120	60	Single	8.1	18.2	25
0.5	208-230	60	Single	4.8	10.8	15

Specifications may be subject to change without notice.

RenewAire Energy Recovery Ventilation

HE1XINH Energy Recovery Ventilator EC Motor with Bypass Economizer

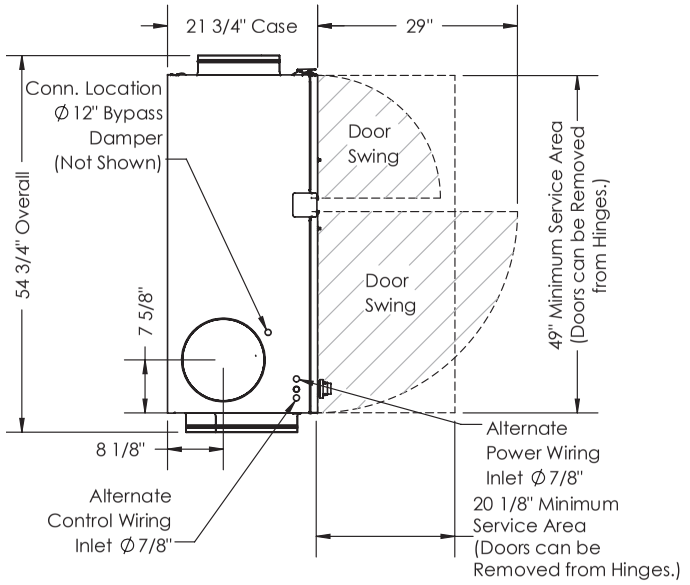

TOP VIEW

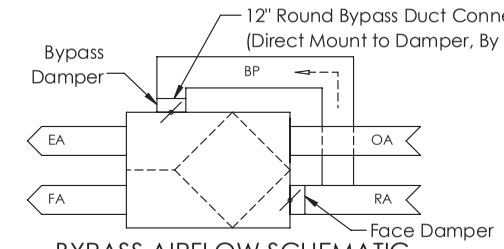

BYPASS AIRFLOW SCHEMATIC
FRONT VIEW

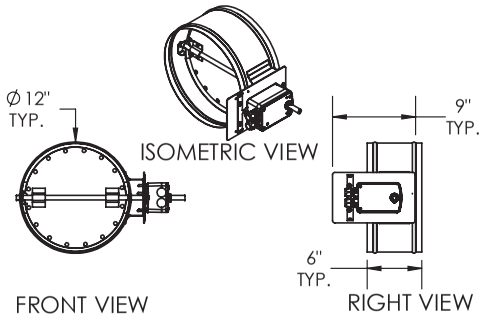

(OA/RA/BP) DAMPER OPTION (QTY.3)
(SHIPPED LOOSE)
SCALE 1:18

ABBREVIATIONS
EA: Exhaust Air to Outside
OA: Outside Air Intake
RA: Room Air to be Exhausted
FA: Fresh Air to Inside
BP: Bypass Air Intake

INSTALLATION ORIENTATION
Unit may be installed in any orientation.

NOTE
1. UNLESS OTHERWISE SPECIFIED, DIMENSIONS ARE ROUNDED TO THE NEAREST EIGHTH OF AN INCH.

2. SPECIFICATIONS MAY BE SUBJECT TO CHANGE WITHOUT NOTICE.

3. UNITS WITH BYPASS WILL REQUIRE ADDITIONAL SPACE FOR THE CONNECTION OF THE BYPASS DUCT (BY OTHERS).

4. FOR INSTALLATION DETAILS, REFER TO I&O MANUAL SUPPLEMENT FOR BYPASS.

5. DAMPERS SHIPPED LOOSE, FIELD INSTALLATION REQUIRED

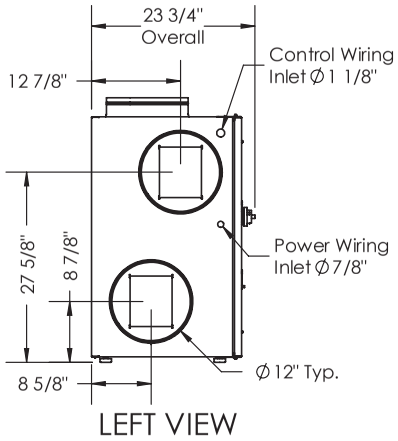

LEFT VIEW

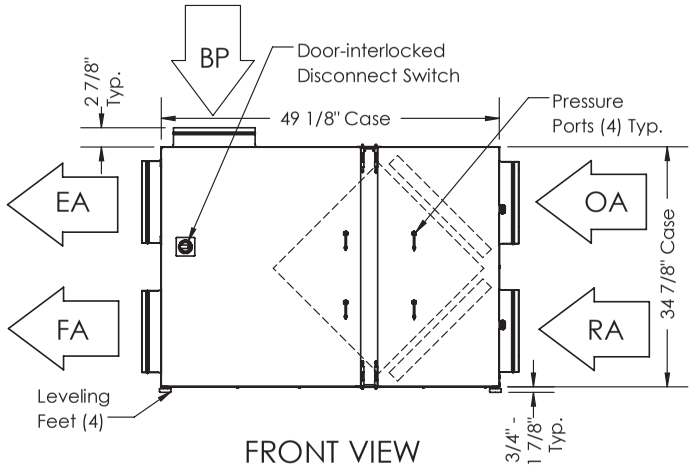

FRONT VIEW

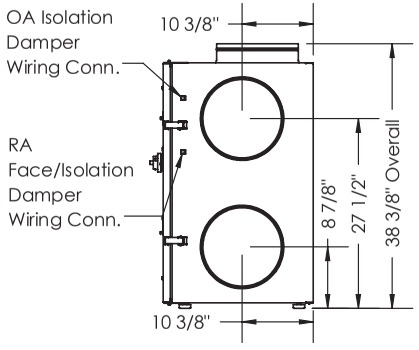

RIGHT VIEW

AIRFLOW CONFIGURATION
Available as shown in dimension drawing.

UNIT MOUNTING & APPLICATION
Can be mounted in any orientation. Airstreams can not be switched.

HE 1XINV

Energy Recovery Ventilator
Standard

INDOOR UNIT

Download specification at:
renewaire.com/specifications

SPECIFICATIONS

Ventilation Type:
Static plate, heat and humidity transfer

Typical Airflow Range: 250-925 CFM

AHRI 1060 Certified Core: One L125-G5

Standard Features:
Non-fused disconnect
24 VAC transformer/relay package
Cross-core differential pressure ports

Filters:
Total qty. 2, MERV 8: 20" x 20" x 2"

Unit Dimensions & Weight:
40 1/2" L x 23 3/4" W x 50 3/4" H
201-272 lbs., varies by option(s)

Max. Shipping Dimensions & Weight (on pallet):
30" L x 42" W x 71" H
325 lbs.
Accessories box shipped loose on top of unit.

Motor(s):
Qty. 2, 0.75 HP ea., Direct drive blower/standard motor packages

Options:
Qty. 2, Variable Speed/ECM - Direct Drive Motors (see HE1XINV EC Motor submittal) - 0.5 HP 120V/1Ph/60HZ, 0.5 HP 208-230V/1Ph/60HZ
Independent blower control
Fused disconnect
Integrated programmable controls - enhanced, premium
Bypass economizer damper (see bypass DIM drawing) - dry-bulb temperature controls (standard), enthalpy controls (option)
Low-leakage motorized isolation dampers - OA, RA or both airstreams
Qty. 2, Factory mounted filter alarms - both airstreams
Double wall construction
Exterior paint - white, custom colors

Accessories:
Filters - MERV 13, 2" (shipped loose)
Backdraft damper 12"
Motorized isolation damper - both airstreams
Wall cap 12" - galvanized, paintable galvanneal
Solid state speed control kit - 115V, 208-230V (1 required per motor)
Digital time clock - wall mount (TC7D-W), in exterior enclosure (TC7D-E)
Carbon dioxide sensor/control - wall mount (CO2-W), duct mount (CO2-D)
IAQ sensor - wall mount (IAQ-W), duct mount (IAQ-D)
Motion occupancy sensor/control - ceiling mount (MC-C), wall mount (MC-W)
Smoke Detector - duct mount (SD-D)
Electric duct heater - RH series (1-11.5 kW); EK series (1–175 kW); designed for indoor ductwork installation only
Indirect gas-fired duct furnace - GH series (50-400 MBH), installed downstream of any fans

AIRFLOW PERFORMANCE

Motor HP Phase	External Static Pressure (Inches Water Column)						
	0.0	0.25	0.5	0.75	0.9	1.25	1.5
0.75 Single Phase	970 CFM 1,490 Watts	925 CFM 1,375 Watts	860 CFM 1,270 Watts	795 CFM 1,160 Watts	750 CFM 1,090 Watts	635 CFM 950 Watts	480 CFM 825 Watts
0.75 Three Phase	970 CFM 1,246 Watts	925 CFM 1,158 Watts	860 CFM 1,039 Watts	795 CFM 928 Watts	750 CFM 856 Watts	635 CFM 691 Watts	480 CFM 509 Watts

Note: Watts is for the entire unit (2 motors).
Note: Airflow performance includes effect of clean, standard filter supplied with unit.

ELECTRICAL DATA

HP	Volts	HZ	Phase	FLA per motor	Min. Cir. Amps	Max. Overcurrent Protection Device
0.75	120	60	Single	9.0	20.3	25
0.75	208-230	60	Single	4.5	10.1	15
0.75	277	60	Single	3.9	8.8	15
0.75	208-230	60	Three	1.7-2.3	5.2	15
0.75	460	60	Three	1.15	2.6	15

Specifications may be subject to change without notice.

HE1XINV Energy Recovery Ventilator Standard

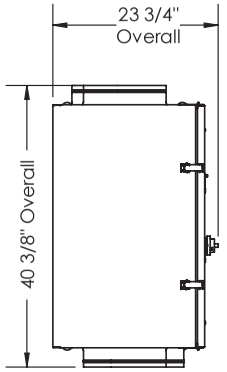

TOP VIEW

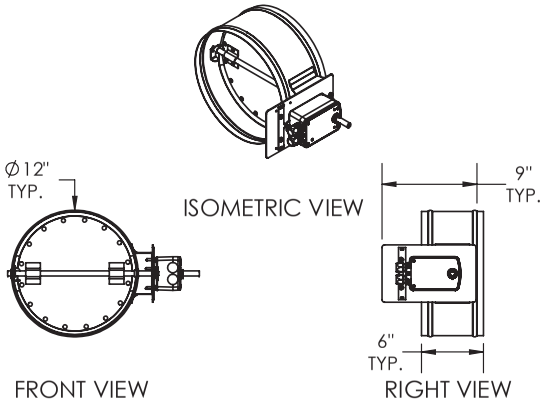

(OA/RA) DAMPER OPTION (QTY. 2)
(SHIPPED LOOSE)
SCALE 1:16

ABBREVIATIONS
EA: Exhaust Air to Outside
OA: Outside Air Intake
RA: Room Air to be Exhausted
FA: Fresh Air to Inside

INSTALLATION ORIENTATION
Unit may be installed in any orientation.

NOTE
1. UNLESS OTHERWISE SPECIFIED, DIMENSIONS ARE ROUNDED TO THE NEAREST EIGHTH OF AN INCH.

2. SPECIFICATIONS MAY BE SUBJECT TO CHANGE WITHOUT NOTICE.

3. DAMPERS SHIPPED LOOSE, FIELD INSTALLATION REQUIRED

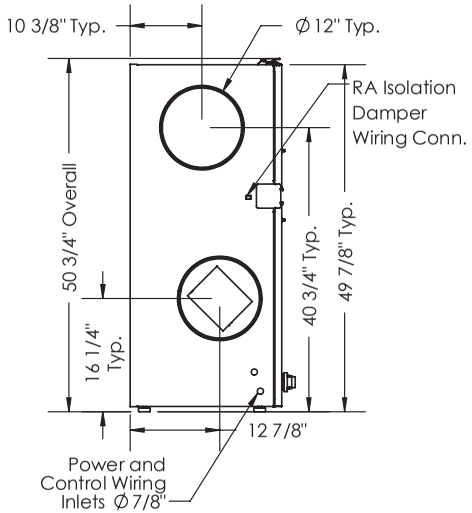

LEFT VIEW

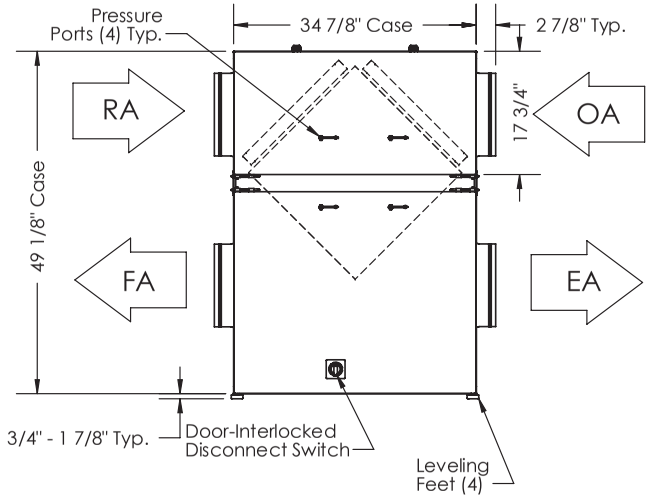

FRONT VIEW

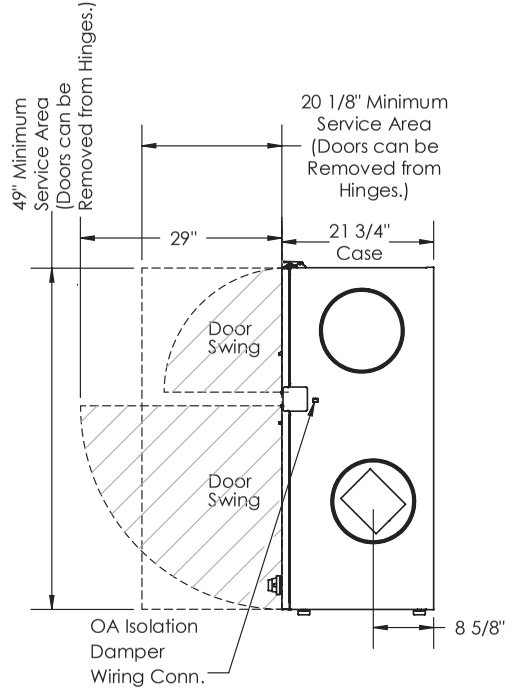

RIGHT VIEW

AIRFLOW CONFIGURATION
Available as shown in dimension drawing.

UNIT MOUNTING & APPLICATION
Can be mounted in any orientation. RA/EA airstream can be switched with OA/FA airstream unless certain options are selected.

HE 1XINV

Energy Recovery Ventilator
EC Motor Option

AHRI CERTIFIED® www.ahridirectory.org Globally Recognized. Industry Respected.

C ETL LISTED US Intertek

INDOOR UNIT

Download specification at:
renewaire.com/specifications

SPECIFICATIONS

Ventilation Type:
Static plate, heat and humidity transfer

Typical Airflow Range: 250-1,100 CFM

AHRI 1060 Certified Core: One L125-G5

Standard Features:
Non-fused disconnect
24 VAC transformer/relay package
Cross-core differential pressure ports

Filters:
Total qty. 2, MERV 8: 20" x 20" x 2"

Unit Dimensions & Weight:
40 1/2" L x 23 3/4" W x 50 3/4" H
204-275 lbs., varies by option(s)

Shipping Dimensions & Weight (on pallet):
30" L x 42" W x 71" H
325 lbs.
Accessories box shipped loose on top of unit.

Motor(s):
Qty. 2, 0.5 HP ea., Direct drive EC blower/ motor packages

Options:
Fused disconnect
Integrated programmable controls - enhanced, premium
Bypass economizer damper (see bypass DIM drawing) - dry-bulb temperature controls (standard), enthalpy controls (option)
Low-leakage motorized isolation dampers - OA, RA or both airstreams
Qty. 2, Factory mounted filter alarms - both airstreams
Double wall construction
Exterior paint - white, custom colors

Accessories:
Filters - MERV 13, 2" (shipped loose)
Backdraft damper 12"
Motorized isolation damper - both airstreams
Wall cap 12" - galvanized, paintable galvanneal
Potentiometer speed control - remote installed
Digital time clock - wall mount (TC7D-W), in exterior enclosure (TC7D-E)
Carbon dioxide sensor/control - wall mount (CO2-W), duct mount (CO2-D)
IAQ sensor - wall mount (IAQ-W), duct mount (IAQ-D)
Motion occupancy sensor/control - ceiling mount (MC-C), wall mount (MC-W)
Smoke Detector - duct mount (SD-D)
Electric duct heater - RH series (1-11.5 kW); EK series (1–175 kW); designed for indoor ductwork installation only
Indirect gas-fired duct furnace - GH series (50-400 MBH), installed downstream of any fans

EC MOTOR OPTION OPERATING RANGE

HE1XINV EC MOTOR		
Sample Points Depicted in Larger Dots		
Airflow (CFM)	**External Static Pressure (Inches Water Column)**	**Unit Power Consumption (Watts)**
324	0.04	86
446	0.07	150
647	0.15	300
794	0.24	564
929	0.33	827
1019	0.41	1042
300	0.11	91
406	0.20	160
579	0.42	359
713	0.65	599
828	0.89	871
883	1.00	1075

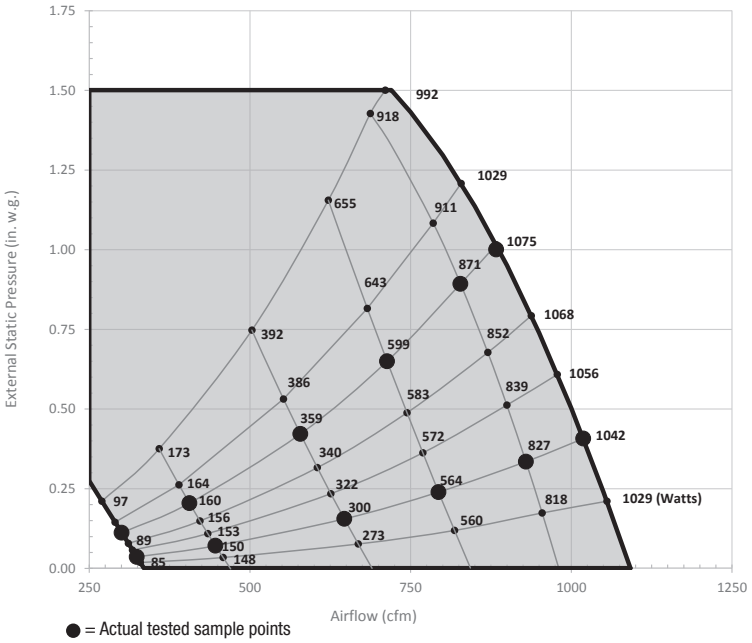

Note: Watts is for the entire unit.
Note: Airflow performance includes effect of clean, standard filter supplied with unit.

ELECTRICAL DATA

HP	Volts	HZ	Phase	FLA per motor	Min. Cir. Amps	Max. Overcurrent Protection Device
0.5	120	60	Single	8.1	18.2	25
0.5	208-230	60	Single	4.8	10.8	15

Specifications may be subject to change without notice.

RenewAire® Energy Recovery Ventilation

HE1XINV Energy Recovery Ventilator EC Motor Option

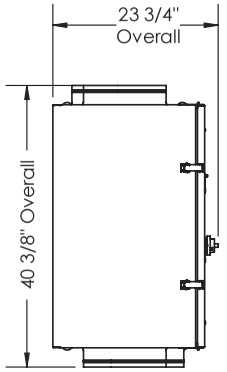

TOP VIEW

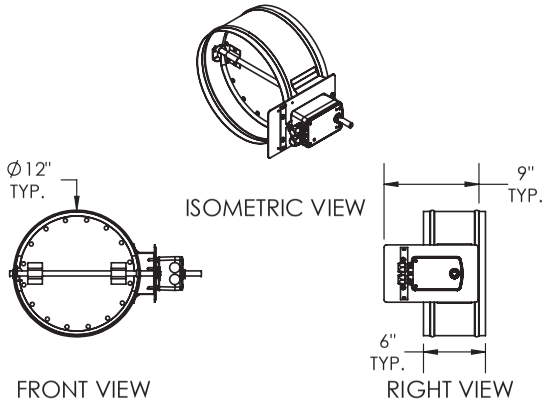

(OA/RA) DAMPER OPTION (QTY. 2)
(SHIPPED LOOSE)
SCALE 1:16

ABBREVIATIONS
EA: Exhaust Air to Outside
OA: Outside Air Intake
RA: Room Air to be Exhausted
FA: Fresh Air to Inside

INSTALLATION ORIENTATION
Unit may be installed in any orientation.

NOTE
1. UNLESS OTHERWISE SPECIFIED, DIMENSIONS ARE ROUNDED TO THE NEAREST EIGHTH OF AN INCH.

2. SPECIFICATIONS MAY BE SUBJECT TO CHANGE WITHOUT NOTICE.

3. DAMPERS SHIPPED LOOSE, FIELD INSTALLATION REQUIRED

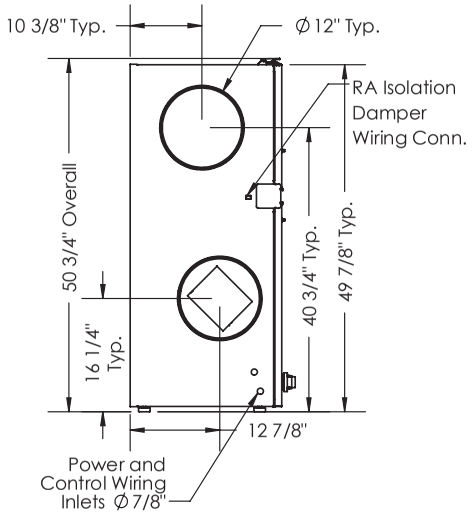

LEFT VIEW

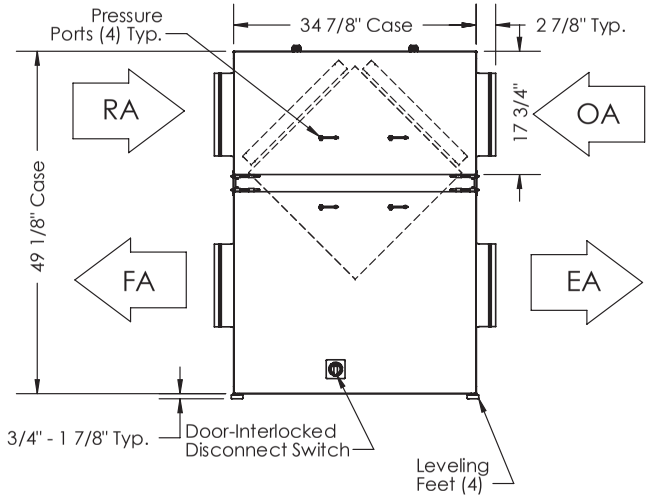

FRONT VIEW

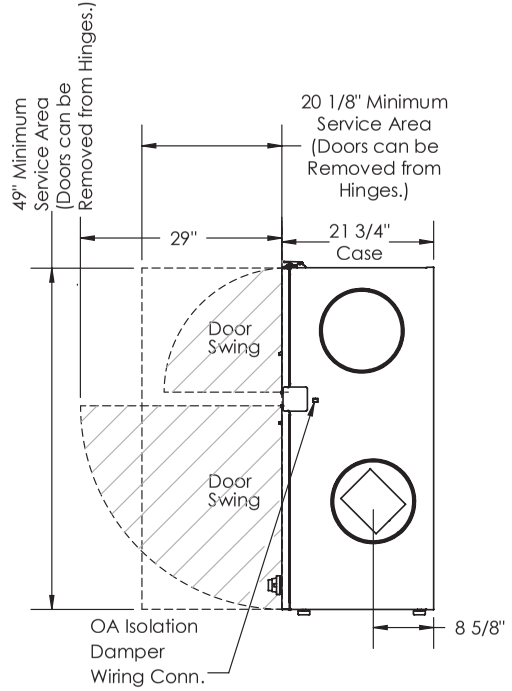

RIGHT VIEW

AIRFLOW CONFIGURATION
Available as shown in dimension drawing.

UNIT MOUNTING & APPLICATION
Can be mounted in any orientation. RA/EA airstream can be switched with OA/FA airstream unless certain options are selected.

HE 1XINV

Energy Recovery Ventilator
Standard with Bypass Economizer

AHRI CERTIFIED www.ahridirectory.org Globally Recognized. Industry Respected.

C ETL LISTED US Intertek

INDOOR UNIT

Download specification at:
renewaire.com/specifications

SPECIFICATIONS

Ventilation Type:
Static plate, heat and humidity transfer

Typical Airflow Range: 250-925 CFM

AHRI 1060 Certified Core: One L125-G5

Standard Features:
Non-fused disconnect
24 VAC transformer/relay package
Cross-core differential pressure ports

Filters:
Total qty. 2, MERV 8: 20" x 20" x 2"

Unit Dimensions & Weight:
40 1/2" L x 23 3/4" W x 50 3/4" H
201-272 lbs., varies by option(s)

Max. Shipping Dimensions & Weight (on pallet):
30" L x 42" W x 71" H
325 lbs.
Accessories box shipped loose on top of unit.

Motor(s):
Qty. 2, 0.75 HP ea., Direct drive blower/standard motor packages

Options:
Qty. 2, Variable Speed/ECM - Direct Drive Motors (see HE1XINV EC Motor submittal) - 0.5 HP 120V/1Ph/60HZ, 0.5 HP 208-230V/1Ph/60HZ
Independent blower control
Fused disconnect
Integrated programmable controls - enhanced, premium
Bypass economizer damper (see bypass DIM drawing) - dry-bulb temperature controls (standard), enthalpy controls (option)
Low-leakage motorized isolation dampers - OA, RA or both airstreams
Qty. 2, Factory mounted filter alarms - both airstreams
Double wall construction
Exterior paint - white, custom colors

Accessories:
Filters - MERV 13, 2" (shipped loose)
Backdraft damper 12"
Motorized isolation damper - both airstreams
Wall cap 12" - galvanized, paintable galvanneal
Solid state speed control kit - 115V, 208-230V (1 required per motor)
Digital time clock - wall mount (TC7D-W), in exterior enclosure (TC7D-E)
Carbon dioxide sensor/control - wall mount (CO2-W), duct mount (CO2-D)
IAQ sensor - wall mount (IAQ-W), duct mount (IAQ-D)
Motion occupancy sensor/control - ceiling mount (MC-C), wall mount (MC-W)
Smoke Detector - duct mount (SD-D)
Electric duct heater - RH series (1-11.5 kW); EK series (1–175 kW); designed for indoor ductwork installation only
Indirect gas-fired duct furnace - GH series (50-400 MBH), installed downstream of any fans

AIRFLOW PERFORMANCE

Motor HP Phase	External Static Pressure (Inches Water Column)						
	0.0	0.25	0.5	0.75	0.9	1.25	1.5
0.75 Single Phase	970 CFM 1,490 Watts	925 CFM 1,375 Watts	860 CFM 1,270 Watts	795 CFM 1,160 Watts	750 CFM 1,090 Watts	635 CFM 950 Watts	480 CFM 825 Watts
0.75 Three Phase	970 CFM 1,246 Watts	925 CFM 1,158 Watts	860 CFM 1,039 Watts	795 CFM 928 Watts	750 CFM 856 Watts	635 CFM 691 Watts	480 CFM 509 Watts

Note: Watts is for the entire unit (2 motors).
Note: Airflow performance includes effect of clean, standard filter supplied with unit.

ELECTRICAL DATA

HP	Volts	HZ	Phase	FLA per motor	Min. Cir. Amps	Max. Overcurrent Protection Device
0.75	120	60	Single	9.0	20.3	25
0.75	208-230	60	Single	4.5	10.1	15
0.75	277	60	Single	3.9	8.8	15
0.75	208-230	60	Three	1.7-2.3	5.2	15
0.75	460	60	Three	1.15	2.6	15

Specifications may be subject to change without notice.

RenewAire Energy Recovery Ventilation

HE1XINV Energy Recovery Ventilator Standard with Bypass Economizer

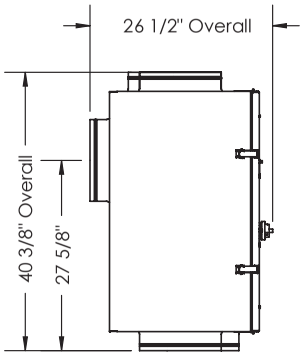

TOP VIEW

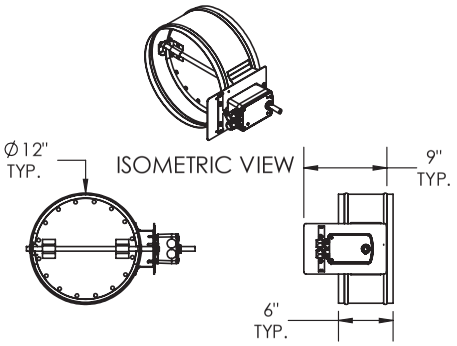

FRONT VIEW RIGHT VIEW

(OA/RA/BP) DAMPER OPTION (QTY.3)
(SHIPPED LOOSE)
SCALE 1:18

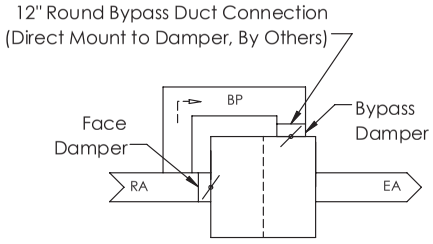

BYPASS AIRFLOW SCHEMATIC
TOP VIEW
(OA/FA Airstream Not Shown)

ABBREVIATIONS
EA: Exhaust Air to Outside
OA: Outside Air Intake
RA: Room Air to be Exhausted
FA: Fresh Air to Inside
BP: Bypass Air Intake

INSTALLATION ORIENTATION
Unit may be installed in any orientation.

NOTE
1. UNLESS OTHERWISE SPECIFIED, DIMENSIONS ARE ROUNDED TO THE NEAREST EIGHTH OF AN INCH.

2. SPECIFICATIONS MAY BE SUBJECT TO CHANGE WITHOUT NOTICE.

3. UNITS WITH BYPASS WILL REQUIRE ADDITIONAL SPACE FOR THE CONNECTION OF THE BYPASS DUCT (BY OTHERS).

4. FOR INSTALLATION DETAILS, REFER TO I&O MANUAL SUPPLEMENT FOR BYPASS.

5. DAMPERS SHIPPED LOOSE, FIELD INSTALLATION REQUIRED

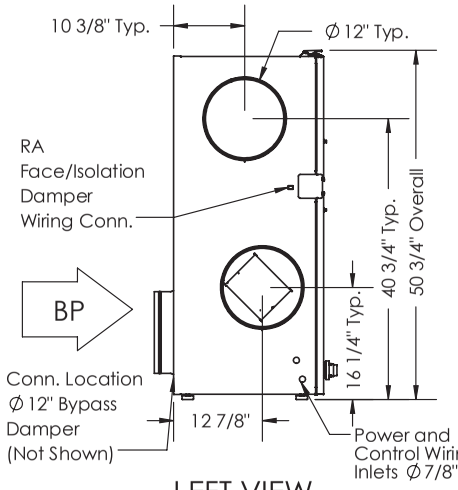

LEFT VIEW

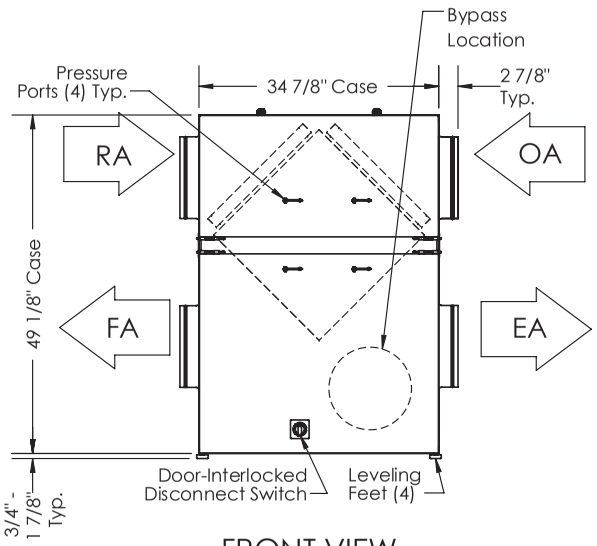

FRONT VIEW

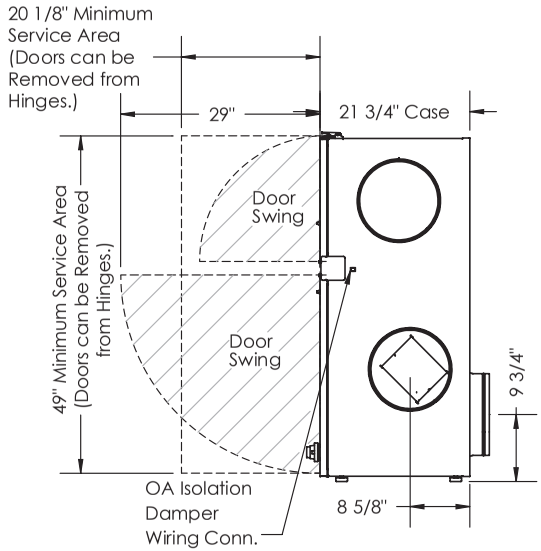

RIGHT VIEW

AIRFLOW CONFIGURATION
Available as shown in dimension drawing.

UNIT MOUNTING & APPLICATION
Can be mounted in any orientation. Airstreams can not be switched.

HE 1XINV

Energy Recovery Ventilator
EC Motor with Bypass Economizer

INDOOR UNIT

Download specification at:
renewaire.com/specifications

SPECIFICATIONS

Ventilation Type:
Static plate, heat and humidity transfer

Typical Airflow Range: 250-1,100 CFM

AHRI 1060 Certified Core: One L125-G5

Standard Features:
Non-fused disconnect
24 VAC transformer/relay package
Cross-core differential pressure ports

Filters:
Total qty. 2, MERV 8: 20" x 20" x 2"

Unit Dimensions & Weight:
40 1/2" L x 23 3/4" W x 50 3/4" H
204-275 lbs., varies by option(s)

Shipping Dimensions & Weight (on pallet):
30" L x 42" W x 71" H
325 lbs.
Accessories box shipped loose on top of unit.

Motor(s):
Qty. 2, 0.5 HP ea., Direct drive EC blower/ motor packages

Options:
Fused disconnect
Integrated programmable controls - enhanced, premium
Bypass economizer damper (see bypass DIM drawing) - dry-bulb temperature controls (standard), enthalpy controls (option)
Low-leakage motorized isolation dampers - OA, RA or both airstreams
Qty. 2, Factory mounted filter alarms - both airstreams
Double wall construction
Exterior paint - white, custom colors

Accessories:
Filters - MERV 13, 2" (shipped loose)
Backdraft damper 12"
Motorized isolation damper - both airstreams
Wall cap 12" - galvanized, paintable galvanneal
Potentiometer speed control - remote installed
Digital time clock - wall mount (TC7D-W), in exterior enclosure (TC7D-E)
Carbon dioxide sensor/control - wall mount (CO2-W), duct mount (CO2-D)
IAQ sensor - wall mount (IAQ-W), duct mount (IAQ-D)
Motion occupancy sensor/control - ceiling mount (MC-C), wall mount (MC-W)
Smoke Detector - duct mount (SD-D)
Electric duct heater - RH series (1-11.5 kW); EK series (1–175 kW); designed for indoor ductwork installation only
Indirect gas-fired duct furnace - GH series (50-400 MBH), installed downstream of any fans

EC MOTOR OPTION OPERATING RANGE

HE1XINV EC MOTOR		
Sample Points Depicted in Larger Dots		
Airflow (CFM)	External Static Pressure (Inches Water Column)	Unit Power Consumption (Watts)
324	0.04	86
446	0.07	150
647	0.15	300
794	0.24	564
929	0.33	827
1019	0.41	1042
300	0.11	91
406	0.20	160
579	0.42	359
713	0.65	599
828	0.89	871
883	1.00	1075

Note: Watts is for the entire unit.
Note: Airflow performance includes effect of clean, standard filter supplied with unit.

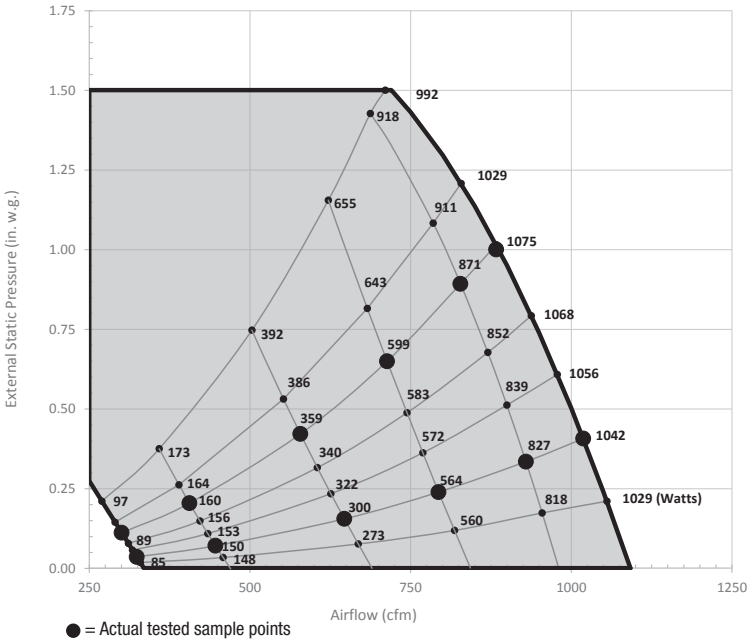

ELECTRICAL DATA

HP	Volts	HZ	Phase	FLA per motor	Min. Cir. Amps	Max. Overcurrent Protection Device
0.5	120	60	Single	8.1	18.2	25
0.5	208-230	60	Single	4.8	10.8	15

Specifications may be subject to change without notice.

HE1XINV Energy Recovery Ventilator EC Motor with Bypass Economizer

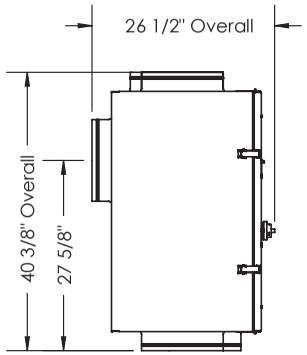

TOP VIEW

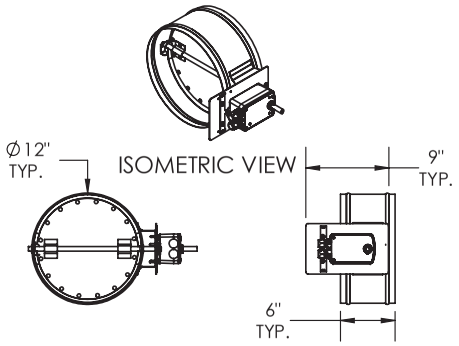

FRONT VIEW RIGHT VIEW

(OA/RA/BP) DAMPER OPTION (QTY.3)
(SHIPPED LOOSE)
SCALE 1:18

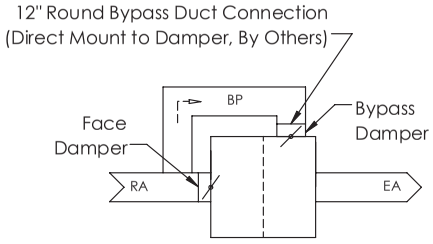

BYPASS AIRFLOW SCHEMATIC
TOP VIEW
(OA/FA Airstream Not Shown)

ABBREVIATIONS
EA: Exhaust Air to Outside
OA: Outside Air Intake
RA: Room Air to be Exhausted
FA: Fresh Air to Inside
BP: Bypass Air Intake

INSTALLATION ORIENTATION
Unit may be installed in any orientation.

NOTE
1. UNLESS OTHERWISE SPECIFIED, DIMENSIONS ARE ROUNDED TO THE NEAREST EIGHTH OF AN INCH.

2. SPECIFICATIONS MAY BE SUBJECT TO CHANGE WITHOUT NOTICE.

3. UNITS WITH BYPASS WILL REQUIRE ADDITIONAL SPACE FOR THE CONNECTION OF THE BYPASS DUCT (BY OTHERS).

4. FOR INSTALLATION DETAILS, REFER TO I&O MANUAL SUPPLEMENT FOR BYPASS.

5. DAMPERS SHIPPED LOOSE, FIELD INSTALLATION REQUIRED

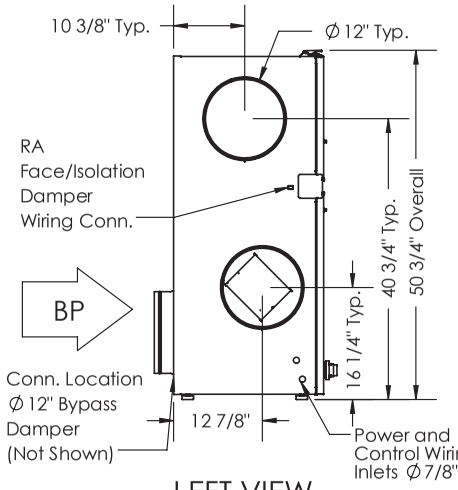

LEFT VIEW

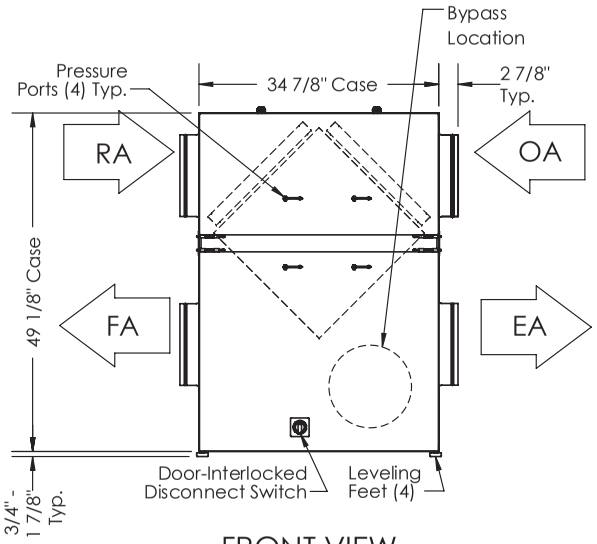

FRONT VIEW

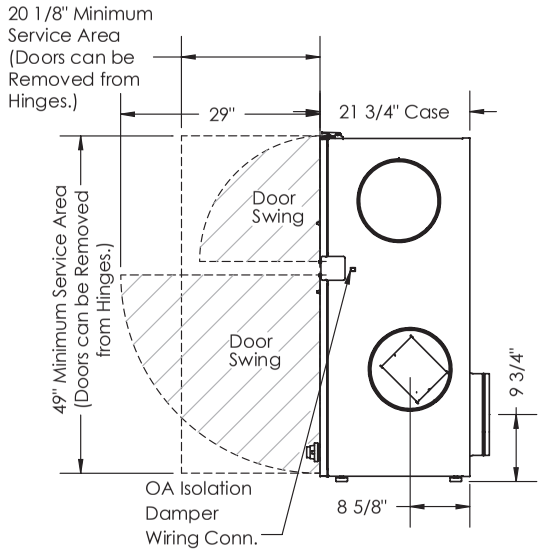

RIGHT VIEW

AIRFLOW CONFIGURATION
Available as shown in dimension drawing.

UNIT MOUNTING & APPLICATION
Can be mounted in any orientation. Airstreams can not be switched.

HE 1XRT

Energy Recovery Ventilator
Standard

AHRI CERTIFIED www.ahridirectory.org Globally Recognized. Industry Respected.

C ETL LISTED US Intertek

ROOFTOP UNIT

Download specification at:
renewaire.com/specifications

SPECIFICATIONS

Ventilation Type:
Static plate, heat and humidity transfer

Typical Airflow Range: 250-870 CFM

AHRI 1060 Certified Core: One L125-G5

Standard Features:
Non-fused disconnect
24 VAC transformer/relay package
Cross-core differential pressure ports

Filters:
Total qty. 2, MERV 8: 20" x 20" x 2"

Unit Dimensions & Weight:
81" L x 40 1/4" W x 44" H
243-346 lbs., varies by option(s)

Max. Shipping Dimensions & Weight (on pallet):
96" L x 47" W x 50" H
441 lbs.

Motor(s):
Qty. 2, 0.75 HP ea., Direct drive blower/standard motor packages

Options:
Qty. 2, Variable Speed/ECM - Direct Drive Motors (see HE1XRT EC Motor submittal) - 0.5 HP 120V/1Ph/60HZ, 0.5 HP 208-230V/1Ph/60HZ
Independent blower control
Onboard variable frequency drives (VFDs) - one or both airstreams
Fused disconnect
Integrated programmable controls - enhanced, premium
Class 1 low leakage motorized isolation dampers - OA, RA or both airstreams
Qty. 2, Factory mounted filter alarms - both airstreams
Double wall construction
Exterior paint - white, custom colors

Accessories:
Filters - MERV 13, 2" (shipped loose)
Backdraft damper 12"
Solid state speed control kit - 115V, 208-230V (1 required per motor)
Roof curb - standard 14"
Curb wind clip
Engineered combo curb for Trane RTU
Engineered combo curb for Carrier RTU
Digital time clock - wall mount (TC7D-W), in exterior enclosure (TC7D-E)
Carbon dioxide sensor/control - wall mount (CO2-W), duct mount (CO2-D)
IAQ sensor - wall mount (IAQ-W), duct mount (IAQ-D)
Motion occupancy sensor/control - ceiling mount (MC-C), wall mount (MC-W)
Smoke Detector - duct mount (SD-D)
Electric duct heater - EK series (1–175 kW); designed for indoor ductwork installation only
Indirect gas-fired duct furnace - GH series (50-400 MBH), installed downstream of any fans

AIRFLOW PERFORMANCE

Motor HP Phase	External Static Pressure (Inches Water Column)					
	0.0	0.5	1.0	1.25	1.45	1.75
0.75 Single Phase	950 CFM 1,630 Watts	820 CFM 1,475 Watts	730 CFM 1,385 Watts	650 CFM 1,300 Watts	560 CFM 1,220 Watts	250 CFM 1,080 Watts
0.75 Three Phase	950 CFM 1,430 Watts	820 CFM 1,255 Watts	730 CFM 1,155 Watts	650 CFM 1,060 Watts	560 CFM 955 Watts	250 CFM 685 Watts

Note: Watts is for the entire unit (2 motors).
Note: Airflow performance includes effect of clean, standard filter supplied with unit.

ELECTRICAL DATA

Standard Electrical Specifications							Optional Factory Installed VFD Electrical Specifications		
HP	Volts	HZ	Phase	FLA per motor	Min. Cir. Amps	Max. Overcurrent Protection Device	FLA per motor	Min. Cir. Amps	Max. Overcurrent Protection Device
0.75	120	60	Single	9.0	20.3	25			
0.75	208-230	60	Single	4.5	10.1	15			
0.75	277	60	Single	3.9	8.8	15			
0.75	208-230	60	Three	1.7-2.3	5.2	15	1.7-2.3	5.7	15
0.75	460	60	Three	1.15	2.6	15	1.15	2.8	15

Specifications may be subject to change without notice.

RenewAire Energy Recovery Ventilation

HE1XRT (RTV/RTR) Energy Recovery Ventilator Standard

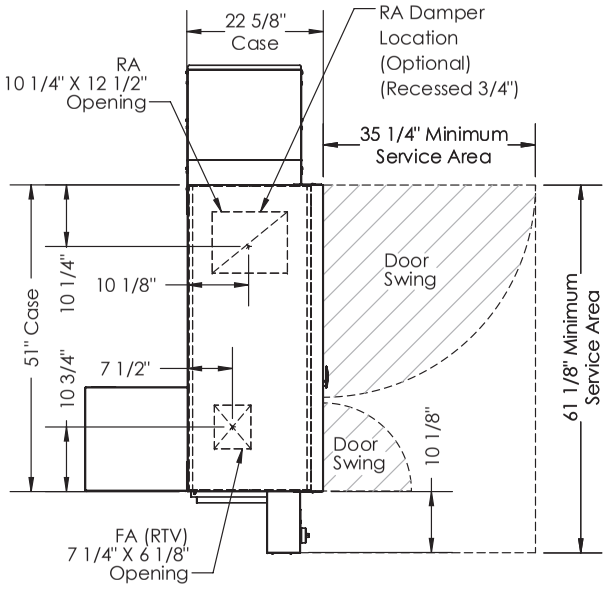

TOP VIEW

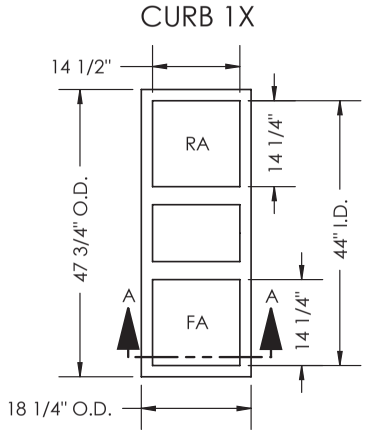

TOP VIEW

ABBREVIATIONS
EA: Exhaust Air to outside
OA: Outside Air intake
RA: Room Air to be exhausted
FA: Fresh Air to inside
RTV: Rooftop Vertical RA & FA
RTR: Rooftop Vertical RA Only

INSTALLATION ORIENTATION
Unit must be installed in orientation shown.

NOTE:
1. UNLESS OTHERWISE SPECIFIED, DIMENSIONS ARE ROUNDED TO THE NEAREST EIGHTH OF AN INCH.

2. SPECIFICATIONS MAY BE SUBJECT TO CHANGE WITHOUT NOTICE.

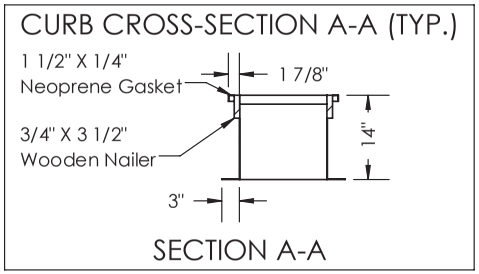

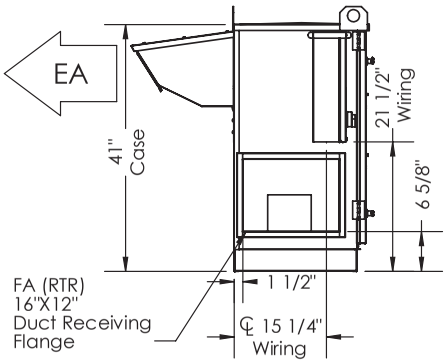

LEFT VIEW

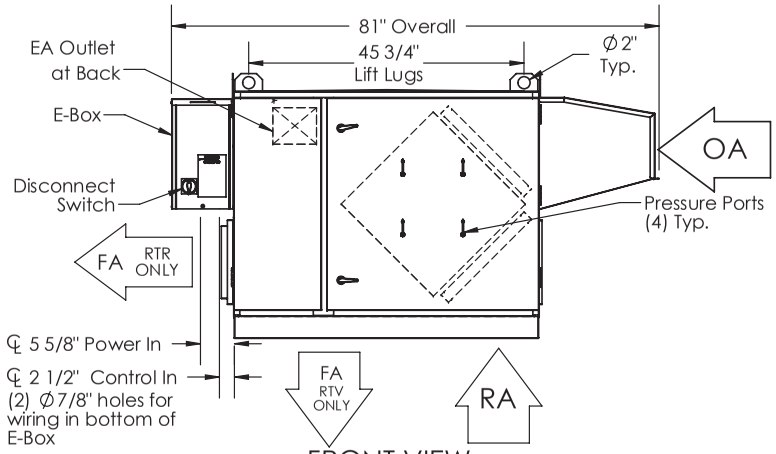

FRONT VIEW

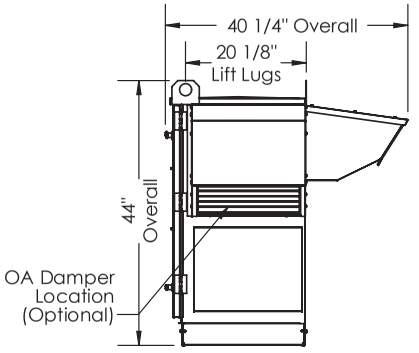

RIGHT VIEW

AIRFLOW CONFIGURATION

Available as shown:

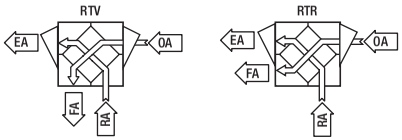

UNIT MOUNTING & APPLICATION

Must be mounted as shown. Airstreams can not be switched.

HE1XRT (RTH/RTF) Energy Recovery Ventilator Standard

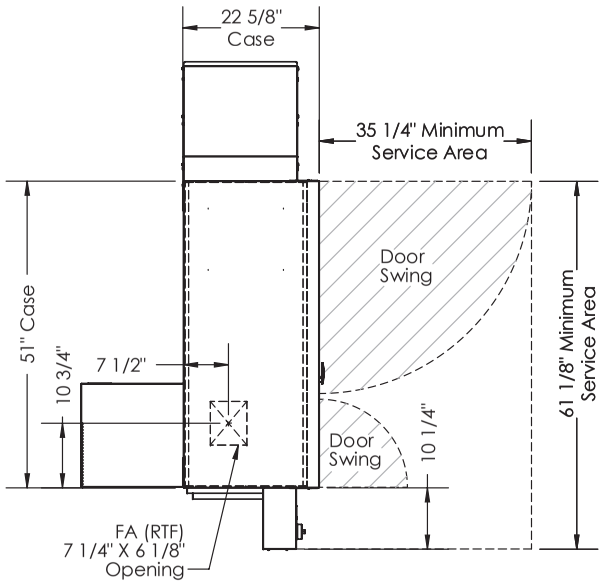

TOP VIEW

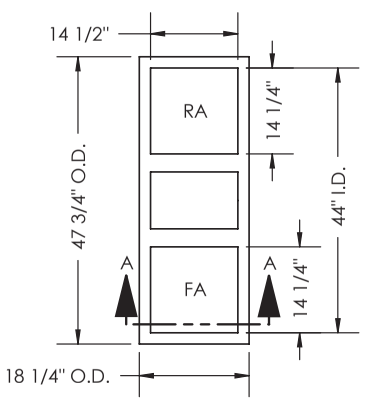

TOP VIEW

ABBREVIATIONS
EA: Exhaust Air to outside
OA: Outside Air intake
RA: Room Air to be exhausted
FA: Fresh Air to inside
RTF: Rooftop Vertical FA Only
RTH: Rooftop Horizontal RA & FA

INSTALLATION ORIENTATION
Unit must be installed in orientation shown.

NOTE:
1. UNLESS OTHERWISE SPECIFIED, DIMENSIONS ARE ROUNDED TO THE NEAREST EIGHTH OF AN INCH.

2. SPECIFICATIONS MAY BE SUBJECT TO CHANGE WITHOUT NOTICE.

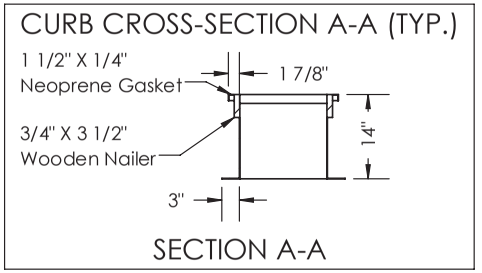

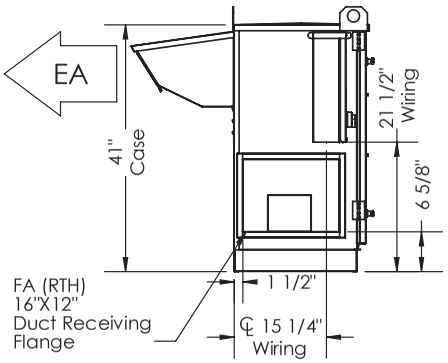

LEFT VIEW

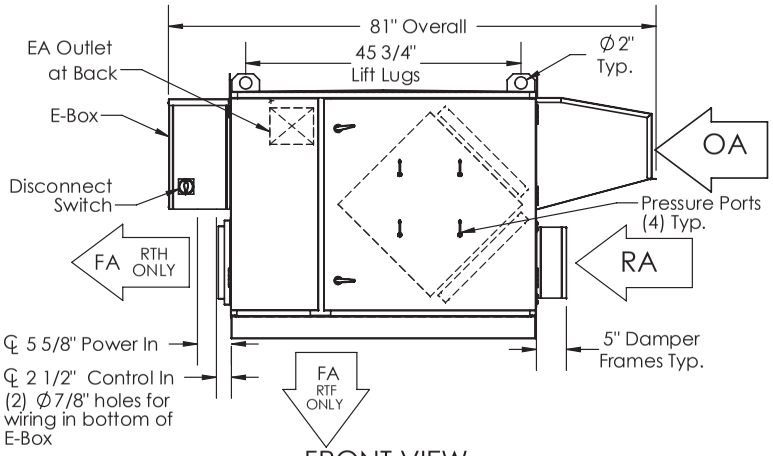

FRONT VIEW

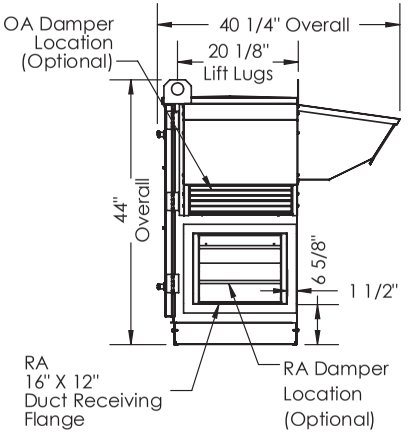

RIGHT VIEW

AIRFLOW CONFIGURATION

Available as shown:

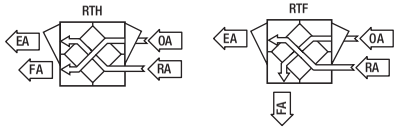

UNIT MOUNTING & APPLICATION

Must be mounted as shown. Airstreams can not be switched.

RenewAire Energy Recovery Ventilation

THIS PAGE IS INTENTIONALLY LEFT BLANK.

HE 1XRT

Energy Recovery Ventilator
EC Motor Option

AHRI CERTIFIED www.ahridirectory.org Globally Recognized. Industry Respected.

C ETL LISTED US Intertek

ROOFTOP UNIT

Download specification at:
renewaire.com/specifications

SPECIFICATIONS

Ventilation Type:
Static plate, heat and humidity transfer

Typical Airflow Range: 250-1,100 CFM

AHRI 1060 Certified Core: One L125-G5

Standard Features:
Non-fused disconnect
24 VAC transformer/relay package
Cross-core differential pressure ports

Filters:
Total qty. 2, MERV 8: 20" x 20" x 2"

Unit Dimensions & Weight:
81" L x 40 1/4" W x 42 1/4" H
246-366 lbs., varies by option(s)

Max. Shipping Dimensions & Weight (on pallet):
96" L x 47" W x 50" H
458 lbs.

Motor(s):
Qty. 2, 0.5 HP ea., Direct drive EC blower/motor packages

Options:
Fused disconnect
Integrated programmable controls - enhanced, premium
Class 1 low leakage motorized isolation dampers - OA, RA or both airstreams
Qty. 2, Factory mounted filter alarms - both airstreams
Double wall construction
Exterior paint - white, custom colors

Accessories:
Filters - MERV 13, 2" (shipped loose)
Backdraft damper 12"
Potentiometer speed control - remote installed
Roof curb - standard 14"
Curb wind clip
Engineered combo curb for Trane RTU
Engineered combo curb for Carrier RTU
Digital time clock - wall mount (TC7D-W), in exterior enclosure (TC7D-E)
Carbon dioxide sensor/control - wall mount (CO2-W), duct mount (CO2-D)
IAQ sensor - wall mount (IAQ-W), duct mount (IAQ-D)
Motion occupancy sensor/control - ceiling mount (MC-C), wall mount (MC-W)
Smoke Detector - duct mount (SD-D)
Electric duct heater - EK series (1–175 kW); designed for indoor ductwork installation only
Indirect gas-fired duct furnace - GH series (50-400 MBH), installed downstream of any fans

EC MOTOR OPTION OPERATING RANGE

HE1XRT EC MOTOR		
Sample Points Depicted in Larger Dots		
Airflow (CFM)	**External Static Pressure (Inches Water Column)**	**Unit Power Consumption (Watts)**
314	0.04	88
433	0.07	153
627	0.15	321
770	0.24	572
901	0.33	838
988	0.41	1053
291	0.11	93
394	0.20	163
561	0.42	368
692	0.65	612
803	0.89	881
857	1.01	1074

Note: Watts is for the entire unit.
Note: Airflow performance includes effect of clean, standard filter supplied with unit.

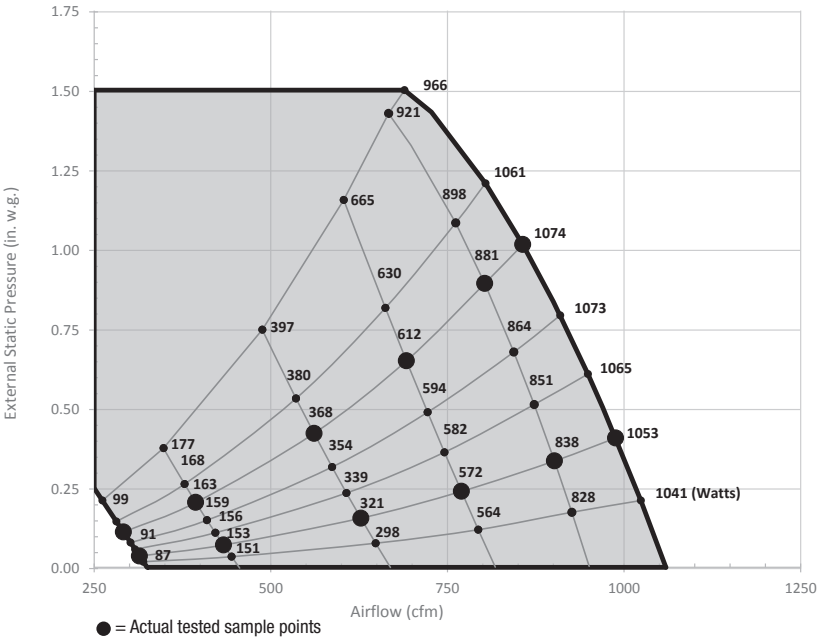

ELECTRICAL DATA

HP	Volts	HZ	Phase	FLA per motor	Min. Cir. Amps	Max. Overcurrent Protection Device
0.5	120	60	Single	8.1	18.2	25
0.5	208-230	60	Single	4.8	10.8	15

Specifications may be subject to change without notice.

RenewAire Energy Recovery Ventilation

HE1XRT (RTV/RTR) Energy Recovery Ventilator EC Motor Option

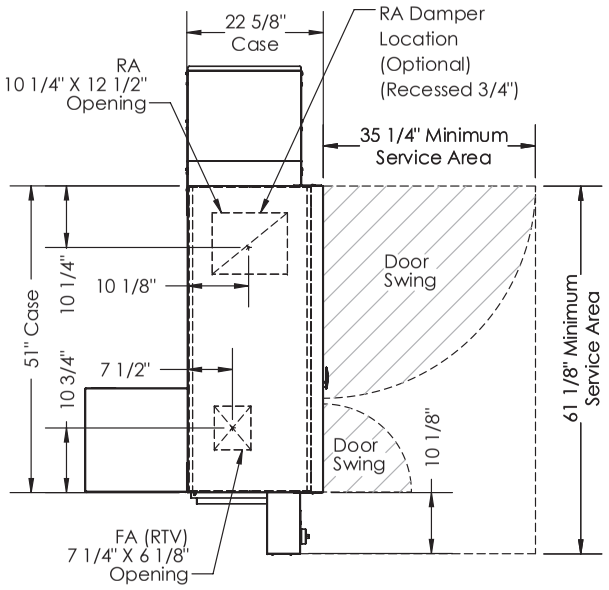

TOP VIEW

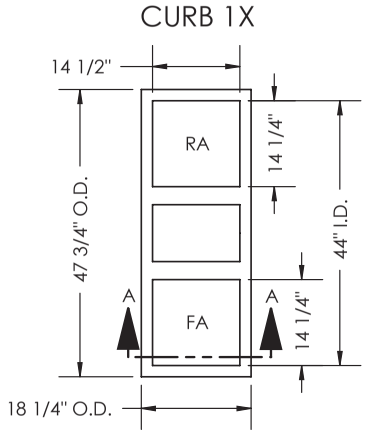

TOP VIEW

ABBREVIATIONS
EA: Exhaust Air to outside
OA: Outside Air intake
RA: Room Air to be exhausted
FA: Fresh Air to inside
RTV: Rooftop Vertical RA & FA
RTR: Rooftop Vertical RA Only

INSTALLATION ORIENTATION
Unit must be installed in orientation shown.

NOTE:
1. UNLESS OTHERWISE SPECIFIED, DIMENSIONS ARE ROUNDED TO THE NEAREST EIGHTH OF AN INCH.

2. SPECIFICATIONS MAY BE SUBJECT TO CHANGE WITHOUT NOTICE.

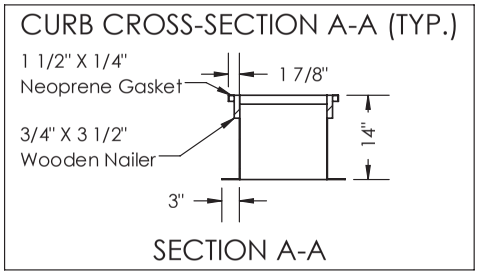

SECTION A-A

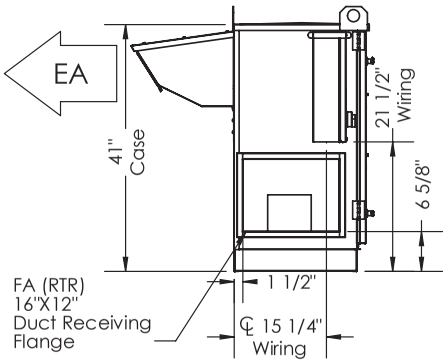

LEFT VIEW

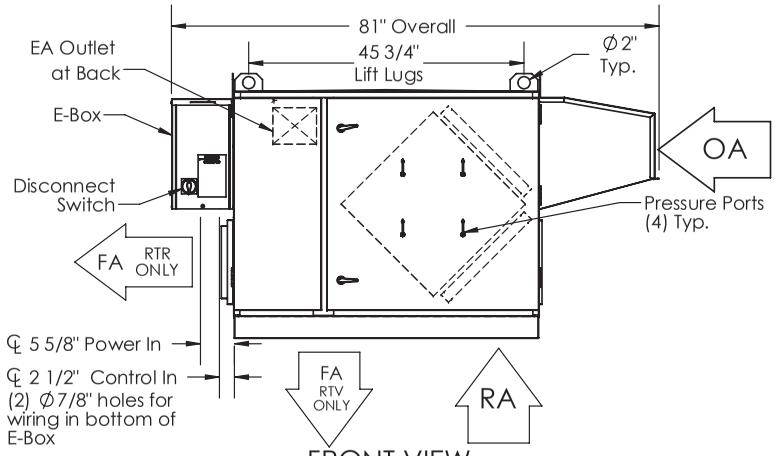

FRONT VIEW

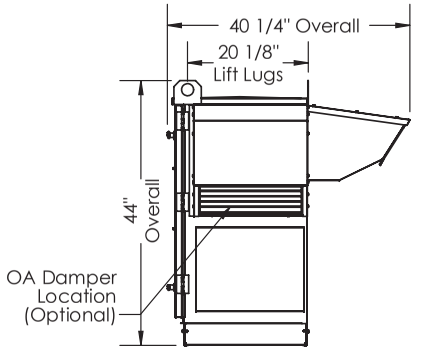

RIGHT VIEW

AIRFLOW CONFIGURATION

Available as shown:

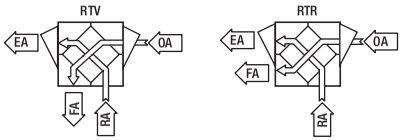

UNIT MOUNTING & APPLICATION

Must be mounted as shown. Airstreams can not be switched.

HE1XRT (RTH/RTF) Energy Recovery Ventilator EC Motor Option

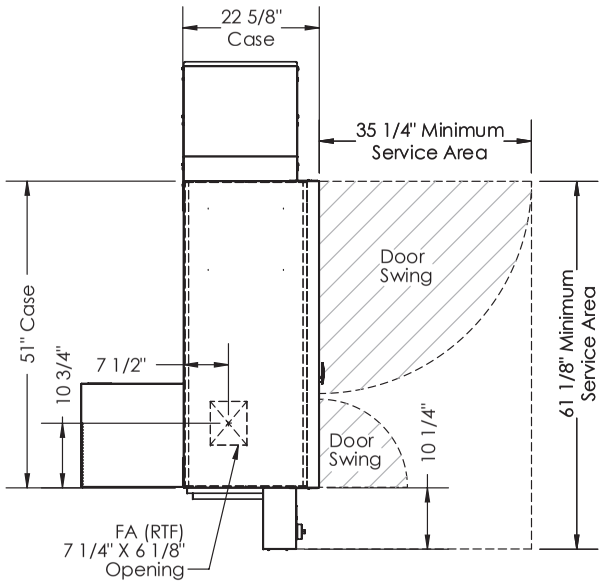

TOP VIEW

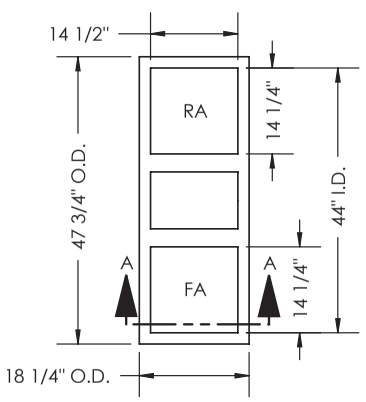

TOP VIEW

ABBREVIATIONS
EA: Exhaust Air to outside
OA: Outside Air intake
RA: Room Air to be exhausted
FA: Fresh Air to inside
RTF: Rooftop Vertical FA Only
RTH: Rooftop Horizontal RA & FA

INSTALLATION ORIENTATION
Unit must be installed in orientation shown.

NOTE:
1. UNLESS OTHERWISE SPECIFIED, DIMENSIONS ARE ROUNDED TO THE NEAREST EIGHTH OF AN INCH.

2. SPECIFICATIONS MAY BE SUBJECT TO CHANGE WITHOUT NOTICE.

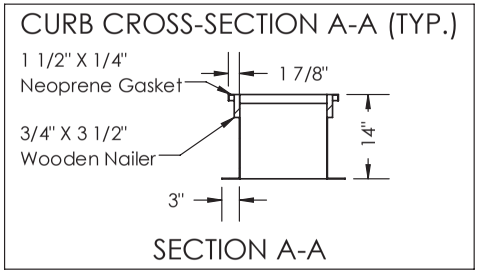

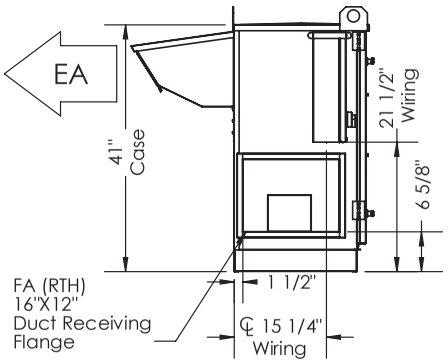

LEFT VIEW

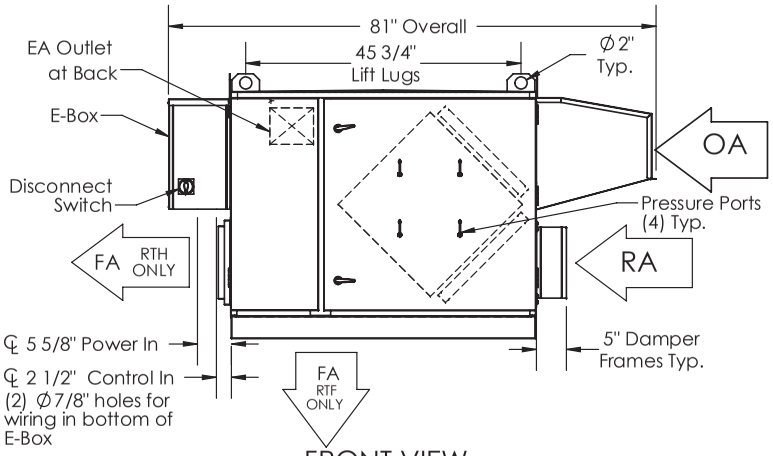

FRONT VIEW

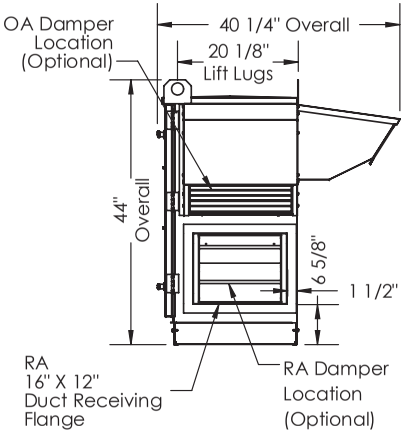

RIGHT VIEW

AIRFLOW CONFIGURATION

Available as shown:

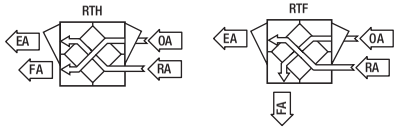

UNIT MOUNTING & APPLICATION

Must be mounted as shown. Airstreams can not be switched.

RenewAire Energy Recovery Ventilation

THIS PAGE IS INTENTIONALLY LEFT BLANK.

HE 1XRTC

Energy Recovery Ventilator
Standard

AHRI CERTIFIED www.ahridirectory.org Globally Recognized. Industry Respected.

C ETL LISTED US Intertek

ROOFTOP UNIT
Direct Connect

Download specification at:
renewaire.com/specifications

SPECIFICATIONS

Ventilation Type:
Static plate, heat and humidity transfer

Typical Airflow Range: 500-900 CFM

AHRI 1060 Certified Core: One L125-G5

Standard Features:
Non-fused disconnect
24 VAC transformer/relay package
Cross-core differential pressure ports

Filters:
Total qty. 2, MERV 8: 20" x 20" x 2"

Unit Dimensions & Weight:
73 1/4" L x 40 1/4" W x 50" H
269-356 lbs., varies by option(s)

Max. Shipping Dimensions & Weight (on pallet):
96" L x 47" W x 50" H
450 lbs.

Motor(s):
Qty. 2, 0.75 HP ea., Direct drive blower/standard motor packages

Options:
Qty. 2, Variable Speed/ECM - Direct Drive Motors - (see HE1XRTC EC Motor submittal) - 0.5 HP 120V/1Ph/60HZ, 0.5 HP 208-230V/1Ph/60HZ
Independent blower control
Fused disconnect
Integrated programmable controls - enhanced, premium
Qty. 2, Factory mounted filter alarms - both airstreams
Double wall construction
Exterior paint - white, custom colors

Accessories:
Filters - MERV 13, 2" (shipped loose)
Solid state speed control kit - 115V, 208-230V (1 required per motor)
RTC transition kit - for vertical RTU, for horizontal RTU
Rooftop RTC transition paint - white, custom colors
Digital time clock - wall mount (TC7D-W), in exterior enclosure (TC7D-E)
Carbon dioxide sensor/control - wall mount (CO2-W), duct mount (CO2-D)
IAQ sensor - wall mount (IAQ-W), duct mount (IAQ-D)
Motion occupancy sensor/control - ceiling mount (MC-C), wall mount (MC-W)
Smoke Detector - duct mount (SD-D)

Note: Electric Duct Heater and Indirect Gas-Fired Duct Furnace are not available on RTC units.

AIRFLOW PERFORMANCE

Damper Position	Total Watts		Tie-In Directly to Rooftop A/C Unit						Unit Ducted Independently							
			Static Pressure in Adjacent Air Handler (Inches Water Column)						External Static Pressure (Inches Water Column)							
	1 Phase	3 Phase	-0.75		-0.5		-0.25		0.0		+0.25		+0.5		+0.75	
			EA	FA	EA	FA	EA	FA	EA	FA	EA	FA	EA	FA	EA	FA
100% Open	1,295	1,135	735	1035	865	990	920	945	975	890	920	845	865	790	735	605
65% Open	1,285	1,088	715	995	825	950	880	905	935	855	880	805	825	760	715	605
55% Open	1,275	1,074	715	980	815	935	870	890	925	845	870	795	815	755	715	615
45% Open	1,265	1,030	680	940	790	895	840	850	895	810	840	760	790	720	680	570
35% Open	1,265	951	630	865	745	825	795	785	850	745	795	700	745	665	630	515
25% Open	1,265	866	570	795	700	755	750	715	800	680	750	640	700	605	570	440
15% Open	1,260	774	510	725	655	685	705	645	750	615	705	580	655	545	510	365

Note: Watts is for the entire unit (2 motors).

Note: Airflow performance includes effect of clean, standard filter supplied with unit.

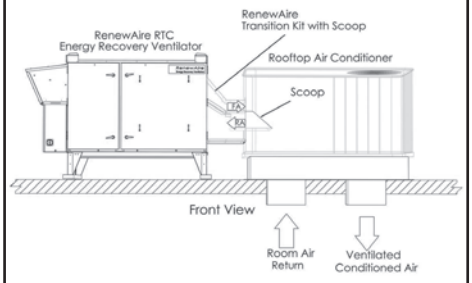

Installation Details - Applicable to all RTC units

Refer to IOM for more details.

ELECTRICAL DATA

HP	Volts	HZ	Phase	FLA per motor	Min. Cir. Amps	Max. Overcurrent Protection Device
0.75	120	60	Single	9.0	20.3	25
0.75	208-230	60	Single	4.5	10.1	15
0.75	277	60	Single	3.9	8.8	15
0.75	208-230	60	Three	1.7-2.3	5.2	15
0.75	460	60	Three	1.15	2.6	15

Specifications may be subject to change without notice.

RenewAire Energy Recovery Ventilation

HE1XRTC Energy Recovery Ventilator Standard

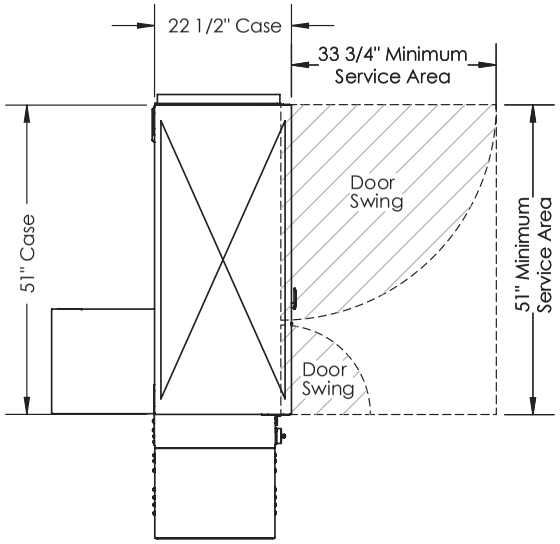

TOP VIEW

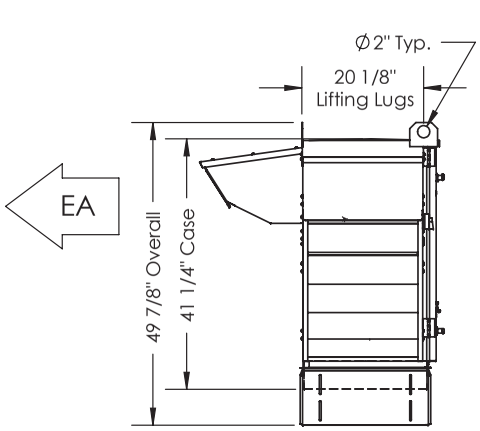

LEFT VIEW

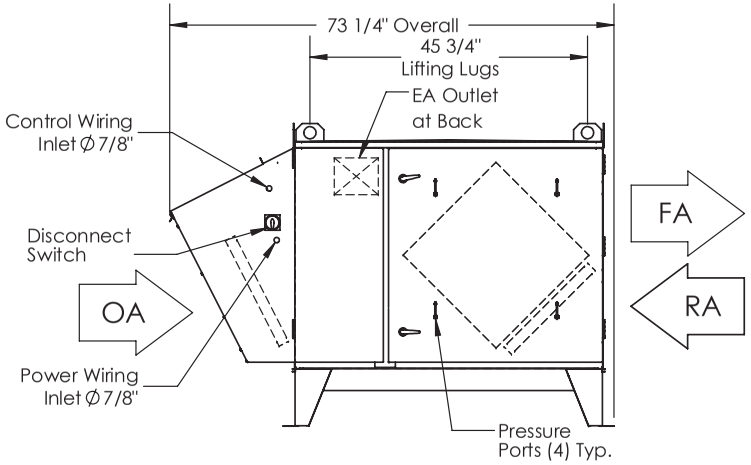

FRONT VIEW

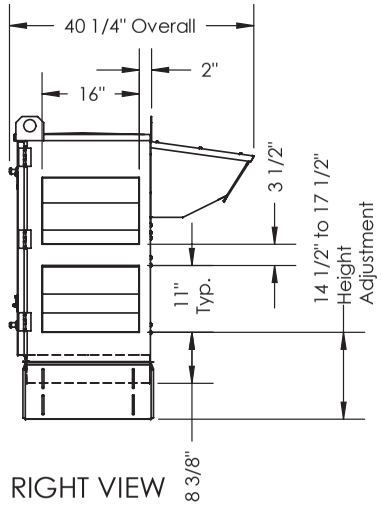

RIGHT VIEW

ABBREVIATIONS
EA: Exhaust Air to outside
OA: Outside Air intake
RA: Room Air to be exhausted
FA: Fresh Air to inside

INSTALLATION ORIENTATION
Unit must be installed in orientation shown.

NOTE
1. UNLESS OTHERWISE SPECIFIED, DIMENSIONS ARE ROUNDED TO THE NEAREST EIGHTH OF AN INCH.

2. SPECIFICATIONS MAY BE SUBJECT TO CHANGE WITHOUT NOTICE.

AIRFLOW CONFIGURATION
Available as shown in dimension drawing.

UNIT MOUNTING & APPLICATION
Must be mounted as shown. Airstreams can not be switched.

HE 1XRTC

Energy Recovery Ventilator
EC Motor Option

ROOFTOP UNIT
Direct Connect

Download specification at:
renewaire.com/specifications

SPECIFICATIONS

Ventilation Type:
Static plate, heat and humidity transfer

Typical Airflow Range: 500-1,100 CFM

AHRI 1060 Certified Core: One L125-G5

Standard Features:
Non-fused disconnect
24 VAC transformer/relay package
Cross-core differential pressure ports

Filters:
Total qty. 2, MERV 8: 20" x 20" x 2"

Unit Dimensions & Weight:
73 1/4" L x 40 1/4" W x 50" H
272-358 lbs., varies by option(s)

Max. Shipping Dimensions & Weight (on pallet):
96" L x 47" W x 50" H
450 lbs.

Motor(s):
Qty. 2, 0.5 HP, Direct drive EC blower/ motor packages

Options:
Fused disconnect
Integrated programmable controls - enhanced, premium
Qty. 2, Factory mounted filter alarms - both airstreams
Double wall construction
Exterior paint - white, custom colors

Accessories:
Filters - MERV 13, 2" (shipped loose)
RTC transition kit - for vertical RTU, for horizontal RTU
Rooftop RTC transition paint - white, custom colors
Digital time clock - wall mount (TC7D-W), in exterior enclosure (TC7D-E)
Carbon dioxide sensor/control - wall mount (CO2-W), duct mount (CO2-D)
IAQ sensor - wall mount (IAQ-W), duct mount (IAQ-D)
Motion occupancy sensor/control - ceiling mount (MC-C), wall mount (MC-W)
Smoke Detector - duct mount (SD-D)

Note: Electric Duct Heater and Indirect Gas-Fired Duct Furnace are not available on RTC units.

EC MOTOR OPTION OPERATING RANGE

Tie-In Directly to Rooftop A/C Unit*

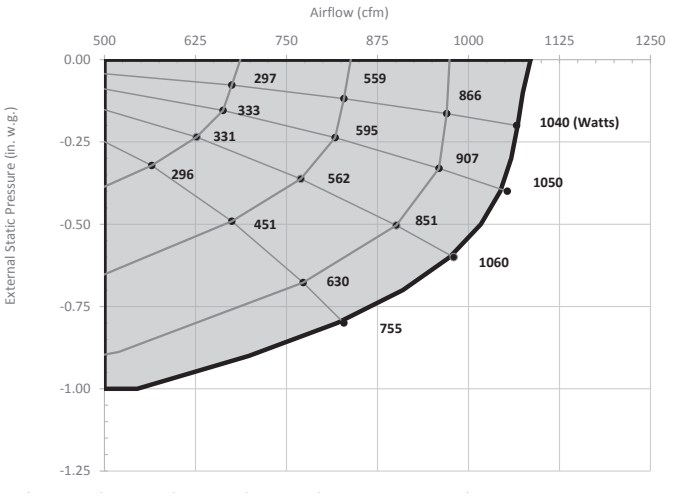

Note: Airflow performance includes effect of clean, standard filter supplied with unit.
● = Actual tested sample points

* See page 38 for installation details.

EC MOTOR OPTION OPERATING RANGE

Unit Ducted Independently*

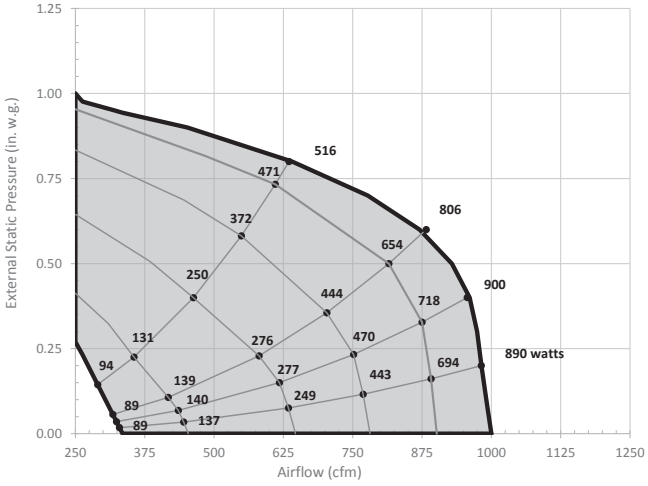

ELECTRICAL DATA

HP	Volts	HZ	Phase	FLA per motor	Min. Cir. Amps	Max. Overcurrent Protection Device
0.5	120	60	Single	8.1	18.2	25
0.5	208-230	60	Single	4.8	10.8	15

Specifications may be subject to change without notice.

HE1XRTC Energy Recovery Ventilator EC Motor Option

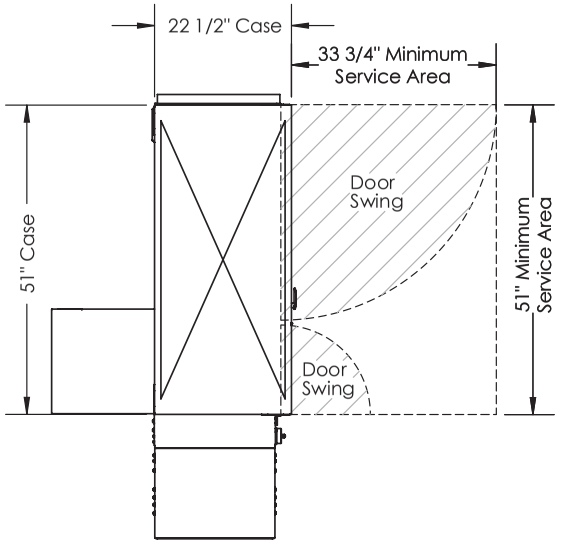

TOP VIEW

ABBREVIATIONS
EA: Exhaust Air to outside
OA: Outside Air intake
RA: Room Air to be exhausted
FA: Fresh Air to inside

INSTALLATION ORIENTATION
Unit must be installed in orientation shown.

NOTE
1. UNLESS OTHERWISE SPECIFIED, DIMENSIONS ARE ROUNDED TO THE NEAREST EIGHTH OF AN INCH.

2. SPECIFICATIONS MAY BE SUBJECT TO CHANGE WITHOUT NOTICE.

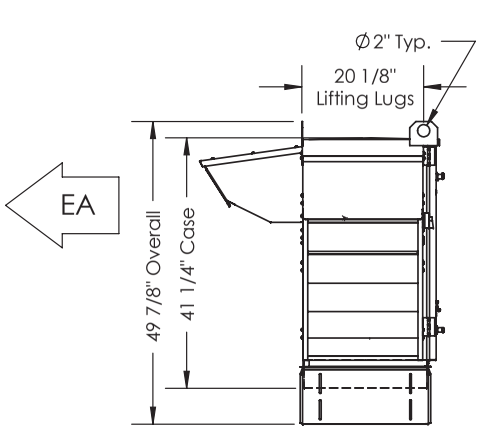

LEFT VIEW

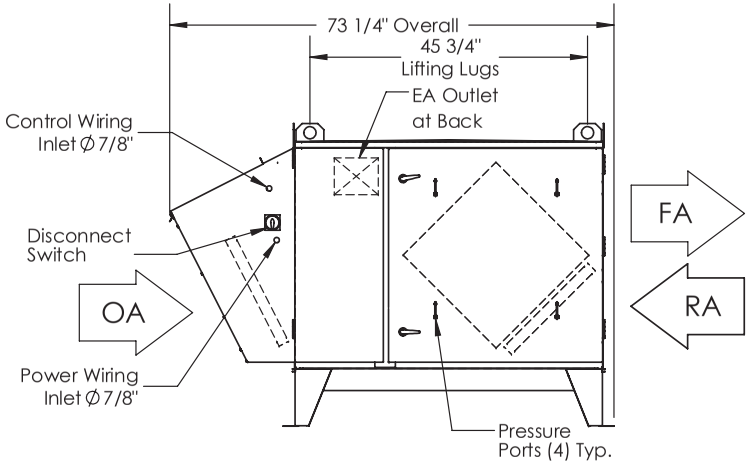

FRONT VIEW

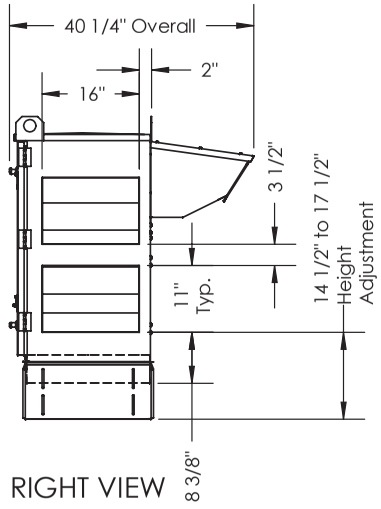

RIGHT VIEW

AIRFLOW CONFIGURATION
Available as shown in dimension drawing.

UNIT MOUNTING & APPLICATION
Must be mounted as shown. Airstreams can not be switched.

HE 1.5XINH

Energy Recovery Ventilator
Standard

INDOOR UNIT

Download specification at:
renewaire.com/specifications

SPECIFICATIONS

Ventilation Type:
Static plate, heat and humidity transfer

Typical Airflow Range:
375–1,575 CFM

AHRI 1060 Certified Core:
One L62-G5 and one L125-G5

Standard Features:
Non-fused disconnect
24 VAC transformer/relay package
Cross-core differential pressure ports

Filters:
Total Qty. 4, MERV 8: (2) 14" x 20" x 2" and (2) 16" x 20" x 2"

Unit Dimensions & Weight:
48 3/4" L x" 34 1/2" W x 53 3/4" H
337-504 lbs., varies by option(s)

Max. Shipping Dimensions & Weight (on pallet):
70" L x 47" W x 53" H
571 lbs.

Motor(s):
Qty. 2, 1.0 HP ea., Direct drive standard motorized impeller packages

Options:
Qty. 2, Variable Speed/ECM - Direct drive motors (see HE1.5XINH EC Motor submittal) - 1.0 HP 120V/1Ph/60HZ, 1.0 HP 208-230V/1Ph/60HZ
Independent blower control
Fused disconnect
Integrated programmable controls - enhanced, premium
Bypass economizer damper (see bypass DIM drawing) - dry-bulb temperature controls (standard), enthalpy controls (option)
Class 1 low leakage motorized isolation dampers - FA, EA or both airstreams
Gravity backdraft dampers
Qty. 2, Factory mounted filter alarms - both airstreams
Double wall construction
Exterior paint - white, custom colors

Accessories:
Filters - MERV 13, 2" (shipped loose)
Backdraft damper - OA or EA
Digital time clock - wall mount (TC7D-W), in exterior enclosure (TC7D-E)
Carbon dioxide sensor/control - wall mount (CO2-W), duct mount (CO2-D)
IAQ sensor - wall mount (IAQ-W), duct mount (IAQ-D)
Motion occupancy sensor/control - ceiling mount (MC-C), wall mount (MC-W)
Smoke Detector - duct mount (SD-D)
Electric duct heater - EK series (1–175 kW)
Indirect gas-fired duct furnace - GH series (50-400 MBH), installed downstream of any fans

AIRFLOW PERFORMANCE

Motor HP Phase	External Static Pressure (Inches Water Column)						
	0.0	0.25	0.50	0.75	1.00	1.25	1.50
1.0 Single Phase	1,575 CFM 1,545 Watts	1,470 CFM 1,525 Watts	1,350 CFM 1,500 Watts	1,225 CFM 1,475 Watts	1,090 CFM 1,435 Watts	950 CFM 1,380 Watts	795 CFM 1,300 Watts
1.0 Three Phase	1,675 CFM 1,410 Watts	1,570 CFM 1,400 Watts	1,435 CFM 1,380 Watts	1,280 CFM 1,340 Watts	1,115 CFM 1,280 Watts	940 CFM 1,210 Watts	760 CFM 1,135 Watts

Note: Watts is for the entire unit (2 motors).
Note: Airflow performance includes effect of clean, standard filter supplied with unit.

ELECTRICAL DATA

HP	V	HZ	Phase	FLA per motor	Min. Cir. Amps	Max. Overcurrent Protection Device
1.0	120	60	Single	6.5	14.6	20
1.0	208-230	60	Single	3.3-3.4	7.7	15
1.0	277	60	Single	2.7	6.1	15
1.0	208-230	60	Three	2.2-2.2	5.0	15
1.0	460	60	Three	1.1	2.5	15

Specifications may be subject to change without notice.

HE1.5XINH Energy Recovery Ventilator Standard

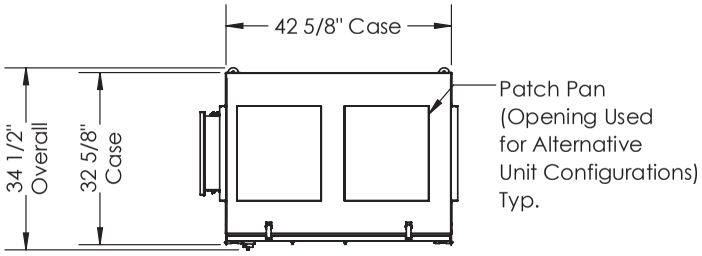

TOP VIEW

ABBREVIATIONS
EA: Exhaust Air to outside
OA: Outside Air intake
RA: Room Air to be exhausted
FA: Fresh Air to inside

INSTALLATION ORIENTATION
Unit may be installed in any orientation.

NOTE
1. UNLESS OTHERWISE SPECIFIED, DIMENSIONS ARE ROUNDED TO THE NEAREST EIGHTH OF AN INCH.

2. SPECIFICATIONS MAY BE SUBJECT TO CHANGE WITHOUT NOTICE.

3. MIN. DUCT CLEARANCE FROM DAMPER BLADE WHEN FULLY OPENED TO BE 2". SMACNA RULES APPLY.

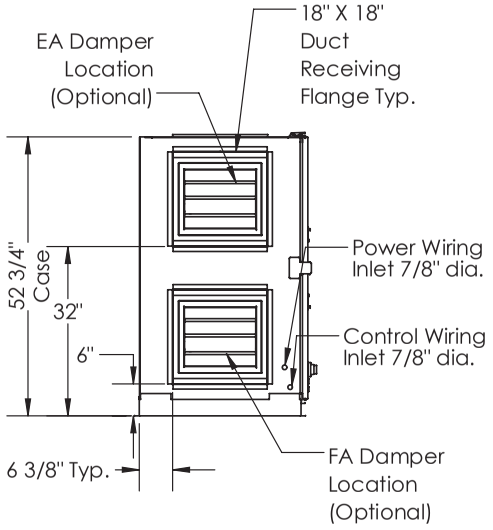

LEFT VIEW

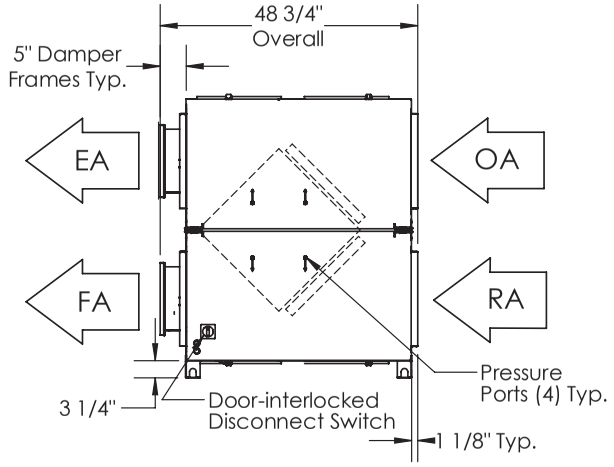

FRONT VIEW

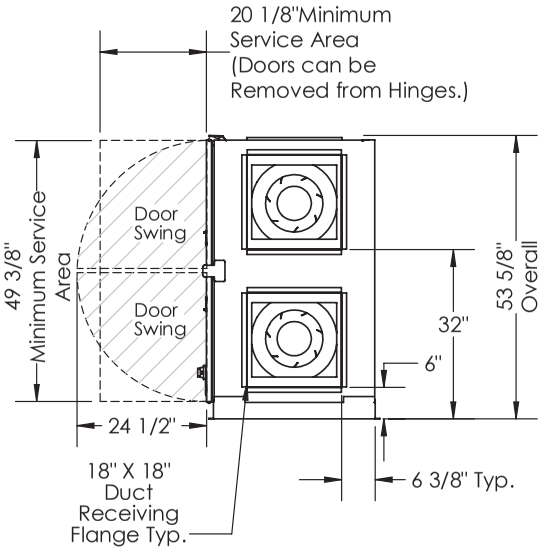

RIGHT VIEW

AIRFLOW CONFIGURATION
Available as shown in dimension drawing.

UNIT MOUNTING & APPLICATION
Can be mounted in any orientation. RA/EA airstream can be switched with OA/FA airstream unless certain options are selected. Duct configuration is field convertible.

HE 1.5XINH

Energy Recovery Ventilator
EC Motor Option

INDOOR UNIT

Download specification at:
renewaire.com/specifications

SPECIFICATIONS

Ventilation Type:
Static plate, heat and humidity transfer

Typical Airflow Range: 375-1,575 CFM

AHRI 1060 Certified Core:
One L62-G5 and one L125-G5

Standard Features:
Non-fused disconnect
24 VAC transformer/relay package
Cross-core differential pressure ports

Filters:
Total qty. 4, MERV 8: (2) 14" x 20" x 2" and (2) 16" x 20" x 2"

Unit Dimensions & Weight:
48 3/4" L x 34 1/2" W x 53 3/4" H
336-504 lbs., varies by option(s)

Max. Shipping Dimensions & Weight (on pallet):
70" L x 47" W x 53" H
571 lbs.

Motor(s):
Qty. 2, 1.0 HP ea., Direct drive EC motorized impeller packages

Options:
Fused disconnect
Integrated programmable controls - enhanced, premium
Bypass economizer damper (see bypass DIM drawing) - dry-bulb temperature controls (standard), enthalpy controls (option)
Class 1 low leakage motorized isolation dampers - FA, EA or both airstreams
Gravity backdraft dampers
Qty. 2, Factory mounted filter alarms - both airstreams
Double wall construction
Exterior paint - white, custom colors

Accessories:
Filters - MERV 13, 2" (shipped loose)
Backdraft damper - OA or EA
Potentiometer speed control - remote installed
Digital time clock - wall mount (TC7D-W), in exterior enclosure (TC7D-E)
Carbon dioxide sensor/control - wall mount (CO2-W), duct mount (CO2-D)
IAQ sensor - wall mount (IAQ-W), duct mount (IAQ-D)
Motion occupancy sensor/control - ceiling mount (MC-C), wall mount (MC-W)
Smoke Detector - duct mount (SD-D)
Electric duct heater - EK series (1–175 kW)
Indirect gas-fired duct furnace - GH series (50-400 MBH), installed downstream of any fans

EC MOTOR OPTION OPERATING RANGE

HE1.5XINH EC MOTOR		
Sample Points Depicted in Larger Dots		
Airflow (CFM)	**External Static Pressure (Inches Water Column)**	**Unit Power Consumption (Watts)**
630	0.07	189
807	0.12	314
1014	0.20	502
1222	0.28	735
1430	0.39	1015
513	0.20	185
656	0.33	310
825	0.52	498
994	0.74	735
1163	1.01	1017

Note: Watts is for the entire unit.
Note: Airflow performance includes effect of clean, standard filter supplied with unit.

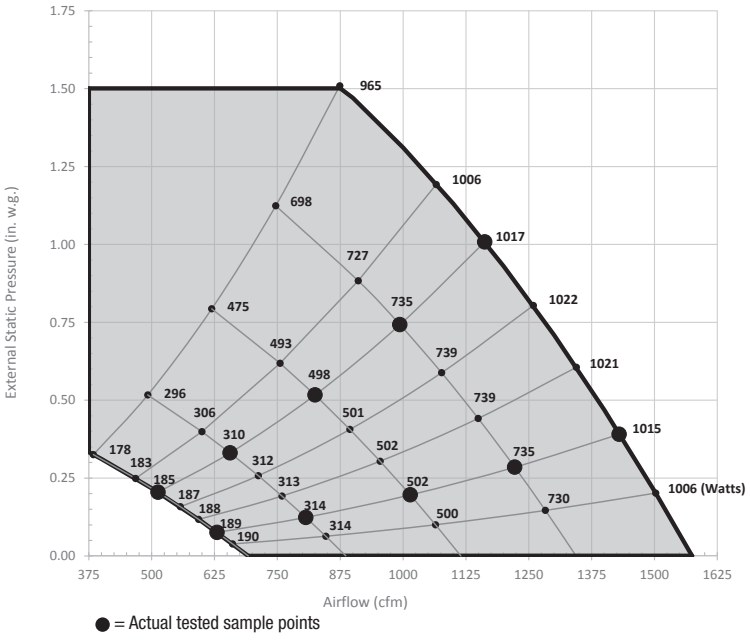

● = Actual tested sample points

ELECTRICAL DATA

HP	Volts	HZ	Phase	FLA per motor	Min. Cir. Amps	Max. Overcurrent Protection Device
1.0	120	60	Single	8.0	18.0	20
1.0	208-230	60	Single	6.2	14.0	15

Specifications may be subject to change without notice.

HE1.5XINH Energy Recovery Ventilator EC Motor Option

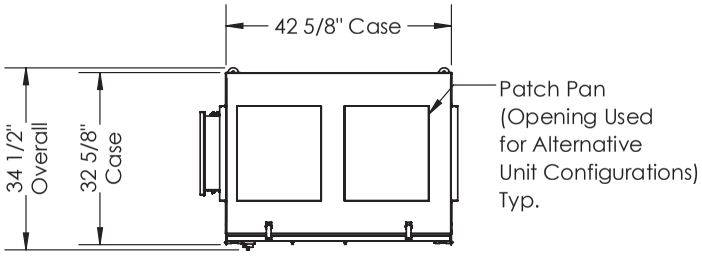

TOP VIEW

ABBREVIATIONS
EA: Exhaust Air to outside
OA: Outside Air intake
RA: Room Air to be exhausted
FA: Fresh Air to inside

INSTALLATION ORIENTATION
Unit may be installed in any orientation.

NOTE
1. UNLESS OTHERWISE SPECIFIED, DIMENSIONS ARE ROUNDED TO THE NEAREST EIGHTH OF AN INCH.

2. SPECIFICATIONS MAY BE SUBJECT TO CHANGE WITHOUT NOTICE.

3. MIN. DUCT CLEARANCE FROM DAMPER BLADE WHEN FULLY OPENED TO BE 2". SMACNA RULES APPLY.

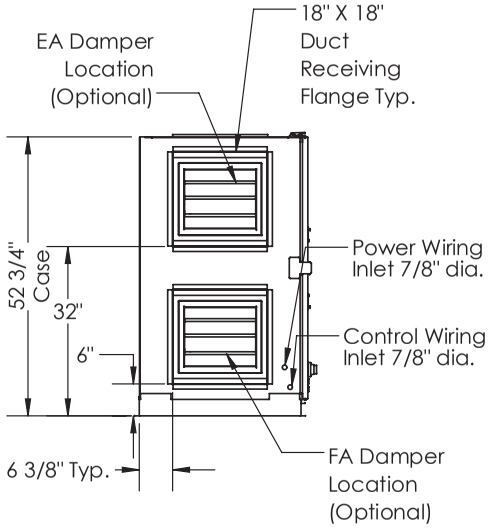

LEFT VIEW

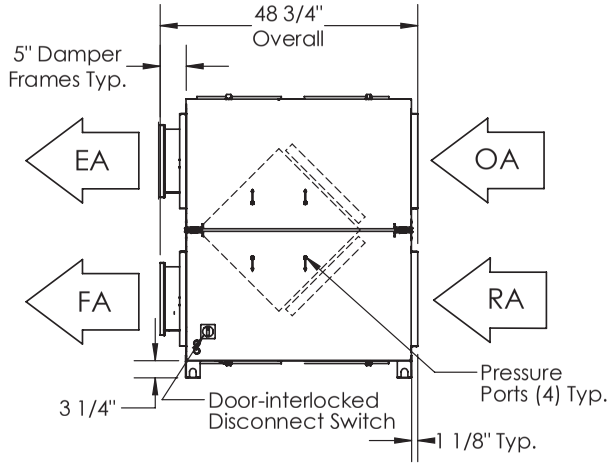

FRONT VIEW

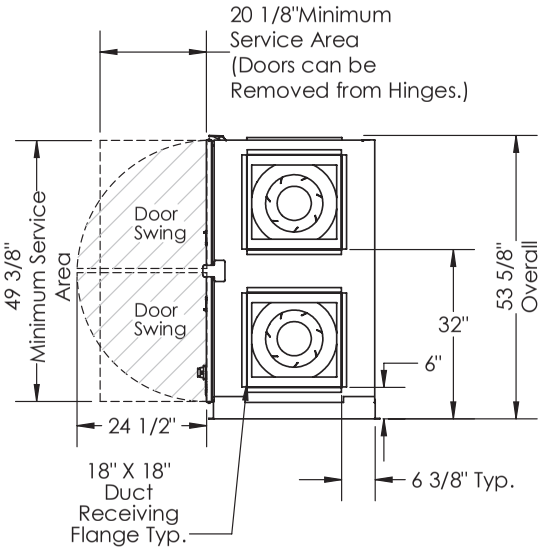

RIGHT VIEW

AIRFLOW CONFIGURATION
Available as shown in dimension drawing.

UNIT MOUNTING & APPLICATION
Can be mounted in any orientation. RA/EA airstream can be switched with OA/FA airstream unless certain options are selected. Duct configuration is field convertible.

HE 1.5XINH

Energy Recovery Ventilator
Standard with Bypass Economizer

INDOOR UNIT

Download specification at:
renewaire.com/specifications

SPECIFICATIONS

Ventilation Type:
Static plate, heat and humidity transfer

Typical Airflow Range:
375–1,575 CFM

AHRI 1060 Certified Core:
One L62-G5 and one L125-G5

Standard Features:
Non-fused disconnect
24 VAC transformer/relay package
Cross-core differential pressure ports

Filters:
Total Qty. 4, MERV 8: (2) 14" x 20" x 2" and (2) 16" x 20" x 2"

Unit Dimensions & Weight:
48 3/4" L x 34 1/2" W x 53 3/4" H
337-504 lbs., varies by option(s)

Max. Shipping Dimensions & Weight (on pallet):
70" L x 47" W x 53" H
571 lbs.

Motor(s):
Qty. 2, 1.0 HP ea., Direct drive standard motorized impeller packages

Options:
Qty. 2, Variable Speed/ECM - Direct drive motors (see HE1.5XINH EC Motor submittal) - 1.0 HP 120V/1Ph/60HZ, 1.0 HP 208-230V/1Ph/60HZ
Independent blower control
Fused disconnect
Integrated programmable controls - enhanced, premium
Bypass economizer damper (see bypass DIM drawing) - dry-bulb temperature controls (standard), enthalpy controls (option)
Class 1 low leakage motorized isolation dampers - FA, EA or both airstreams
Gravity backdraft dampers
Qty. 2, Factory mounted filter alarms - both airstreams
Double wall construction
Exterior paint - white, custom colors

Accessories:
Filters - MERV 13, 2" (shipped loose)
Backdraft damper - OA or EA
Digital time clock - wall mount (TC7D-W), in exterior enclosure (TC7D-E)
Carbon dioxide sensor/control - wall mount (CO2-W), duct mount (CO2-D)
IAQ sensor - wall mount (IAQ-W), duct mount (IAQ-D)
Motion occupancy sensor/control - ceiling mount (MC-C), wall mount (MC-W)
Smoke Detector - duct mount (SD-D)
Electric duct heater - EK series (1–175 kW)
Indirect gas-fired duct furnace - GH series (50-400 MBH), installed downstream of any fans

AIRFLOW PERFORMANCE

Motor HP Phase	External Static Pressure (Inches Water Column)						
	0.0	0.25	0.50	0.75	1.00	1.25	1.50
1.0 Single Phase	1,575 CFM 1,545 Watts	1,470 CFM 1,525 Watts	1,350 CFM 1,500 Watts	1,225 CFM 1,475 Watts	1,090 CFM 1,435 Watts	950 CFM 1,380 Watts	795 CFM 1,300 Watts
1.0 Three Phase	1,675 CFM 1,410 Watts	1,570 CFM 1,400 Watts	1,435 CFM 1,380 Watts	1,280 CFM 1,340 Watts	1,115 CFM 1,280 Watts	940 CFM 1,210 Watts	760 CFM 1,135 Watts

Note: Watts is for the entire unit (2 motors).
Note: Airflow performance includes effect of clean, standard filter supplied with unit.

ELECTRICAL DATA

HP	V	HZ	Phase	FLA per motor	Min. Cir. Amps	Max. Overcurrent Protection Device
1.0	120	60	Single	6.5	14.6	20
1.0	208-230	60	Single	3.3-3.4	7.7	15
1.0	277	60	Single	2.7	6.1	15
1.0	208-230	60	Three	2.2-2.2	5.0	15
1.0	460	60	Three	1.1	2.5	15

Specifications may be subject to change without notice.

HE1.5XINH Energy Recovery Ventilator Standard with Bypass Economizer

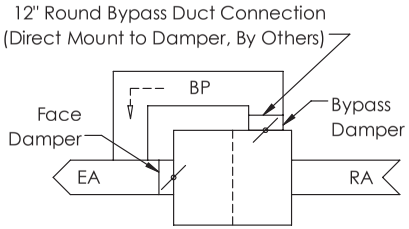

BYPASS AIRFLOW SCHEMATIC
TOP VIEW
(OA/FA Airstream Not Shown)

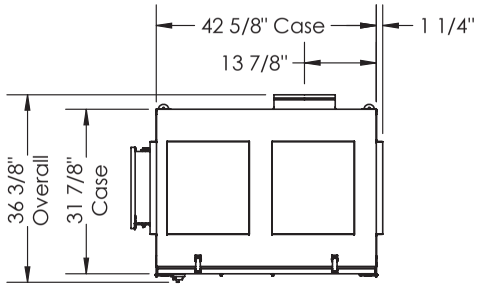

TOP VIEW

ABBREVIATIONS
EA: Exhaust Air to outside
OA: Outside Air intake
RA: Room Air to be exhausted
FA: Fresh Air to inside
BP: Bypass Air outlet

INSTALLATION ORIENTATION
Unit may be installed in any orientation.

NOTE
1. UNLESS OTHERWISE SPECIFIED, DIMENSIONS ARE ROUNDED TO THE NEAREST EIGHTH OF AN INCH.

2. SPECIFICATIONS MAY BE SUBJECT TO CHANGE WITHOUT NOTICE.

3. MIN. DUCT CLEARANCE FROM DAMPER BLADE WHEN FULLY OPENED TO BE 2". SMACNA RULES APPLY.

4. UNITS WITH BYPASS WILL REQUIRE ADDITIONAL SPACE FOR THE CONNECTION OF THE BYPASS DUCT (BY OTHERS).

5. FOR INSTALLATION DETAILS, REFER TO I&O MANUAL SUPPLEMENT FOR BYPASS.

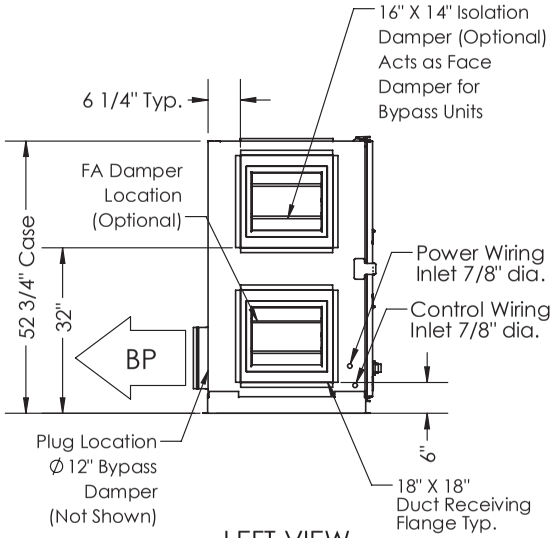

LEFT VIEW

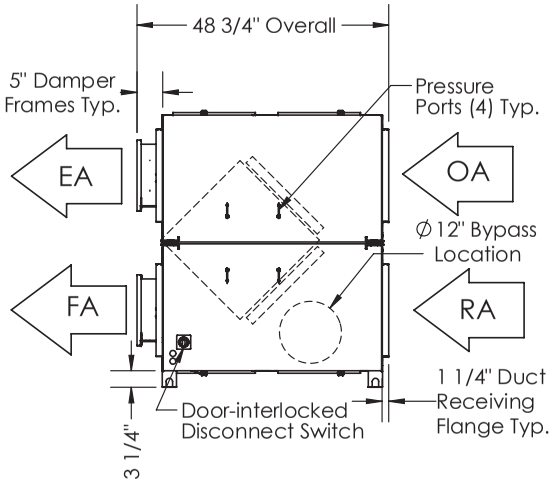

FRONT VIEW

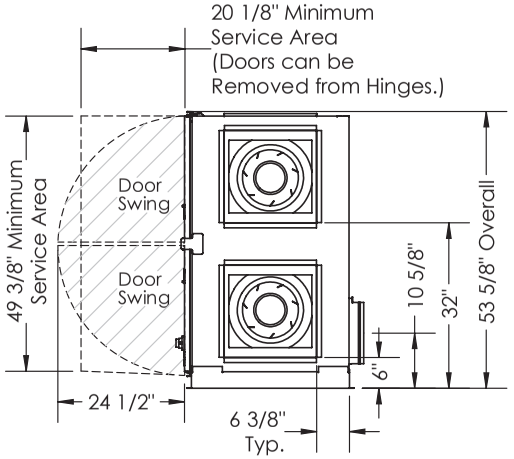

RIGHT VIEW

AIRFLOW CONFIGURATION
Available as shown in dimension drawing.

UNIT MOUNTING & APPLICATION
Can be mounted in any orientation. Airstreams can not be switched.

HE 1.5XINH

Energy Recovery Ventilator
EC Motor with Bypass Economizer

INDOOR UNIT

Download specification at:
renewaire.com/specifications

SPECIFICATIONS

Ventilation Type:
Static plate, heat and humidity transfer

Typical Airflow Range: 375-1,575 CFM

AHRI 1060 Certified Core:
One L62-G5 and one L125-G5

Standard Features:
Non-fused disconnect
24 VAC transformer/relay package
Cross-core differential pressure ports

Filters:
Total qty. 4, MERV 8: (2) 14" x 20" x 2" and (2) 16" x 20" x 2"

Unit Dimensions & Weight:
48 3/4" L x 34 1/2" W x 53 3/4" H
336-504 lbs., varies by option(s)

Max. Shipping Dimensions & Weight (on pallet):
70" L x 47" W x 53" H
571 lbs.

Motor(s):
Qty. 2, 1.0 HP ea., Direct drive EC motorized impeller packages

Options:
Fused disconnect
Integrated programmable controls - enhanced, premium
Bypass economizer damper (see bypass DIM drawing) - dry-bulb temperature controls (standard), enthalpy controls (option)
Class 1 low leakage motorized isolation dampers - FA, EA or both airstreams
Gravity backdraft dampers
Qty. 2, Factory mounted filter alarms - both airstreams
Double wall construction
Exterior paint - white, custom colors

Accessories:
Filters - MERV 13, 2" (shipped loose)
Backdraft damper - OA or EA
Potentiometer speed control - remote installed
Digital time clock - wall mount (TC7D-W), in exterior enclosure (TC7D-E)
Carbon dioxide sensor/control - wall mount (CO2-W), duct mount (CO2-D)
IAQ sensor - wall mount (IAQ-W), duct mount (IAQ-D)
Motion occupancy sensor/control - ceiling mount (MC-C), wall mount (MC-W)
Smoke Detector - duct mount (SD-D)
Electric duct heater - EK series (1–175 kW)
Indirect gas-fired duct furnace - GH series (50-400 MBH), installed downstream of any fans

EC MOTOR OPTION OPERATING RANGE

HE1.5XINH EC MOTOR		
Sample Points Depicted in Larger Dots		
Airflow (CFM)	**External Static Pressure (Inches Water Column)**	**Unit Power Consumption (Watts)**
630	0.07	189
807	0.12	314
1014	0.20	502
1222	0.28	735
1430	0.39	1015
513	0.20	185
656	0.33	310
825	0.52	498
994	0.74	735
1163	1.01	1017

Note: Watts is for the entire unit.
Note: Airflow performance includes effect of clean, standard filter supplied with unit.

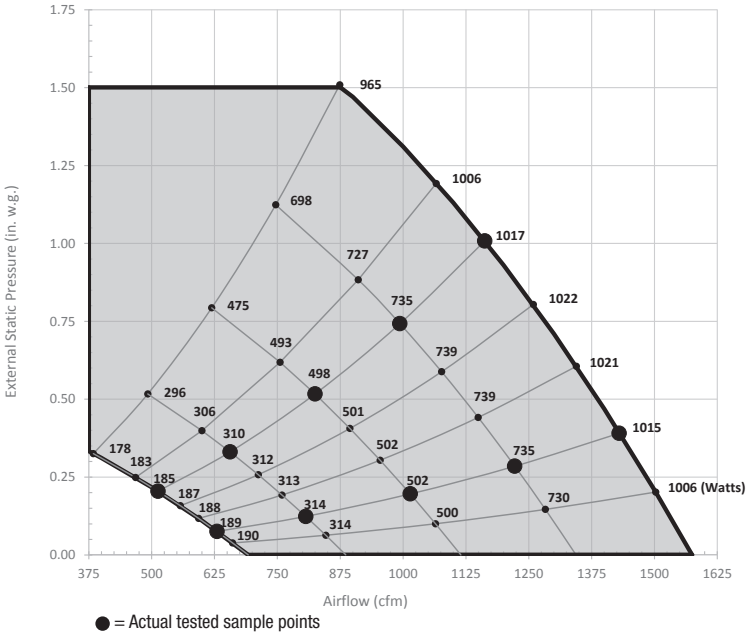

● = Actual tested sample points

ELECTRICAL DATA

HP	Volts	HZ	Phase	FLA per motor	Min. Cir. Amps	Max. Overcurrent Protection Device
1.0	120	60	Single	8.0	18.0	20
1.0	208-230	60	Single	6.2	14.0	15

Specifications may be subject to change without notice.

HE1.5XINH Energy Recovery Ventilator EC Motor with Bypass Economizer

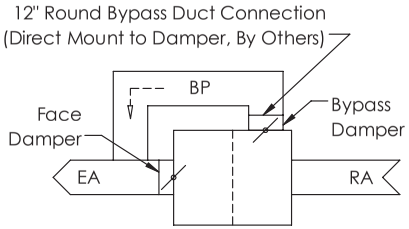

BYPASS AIRFLOW SCHEMATIC
TOP VIEW
(OA/FA Airstream Not Shown)

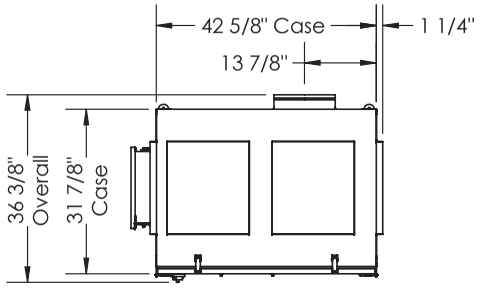

TOP VIEW

ABBREVIATIONS
EA: Exhaust Air to outside
OA: Outside Air intake
RA: Room Air to be exhausted
FA: Fresh Air to inside
BP: Bypass Air outlet

INSTALLATION ORIENTATION
Unit may be installed in any orientation.

NOTE
1. UNLESS OTHERWISE SPECIFIED, DIMENSIONS ARE ROUNDED TO THE NEAREST EIGHTH OF AN INCH.

2. SPECIFICATIONS MAY BE SUBJECT TO CHANGE WITHOUT NOTICE.

3. MIN. DUCT CLEARANCE FROM DAMPER BLADE WHEN FULLY OPENED TO BE 2". SMACNA RULES APPLY.

4. UNITS WITH BYPASS WILL REQUIRE ADDITIONAL SPACE FOR THE CONNECTION OF THE BYPASS DUCT (BY OTHERS).

5. FOR INSTALLATION DETAILS, REFER TO I&O MANUAL SUPPLEMENT FOR BYPASS.

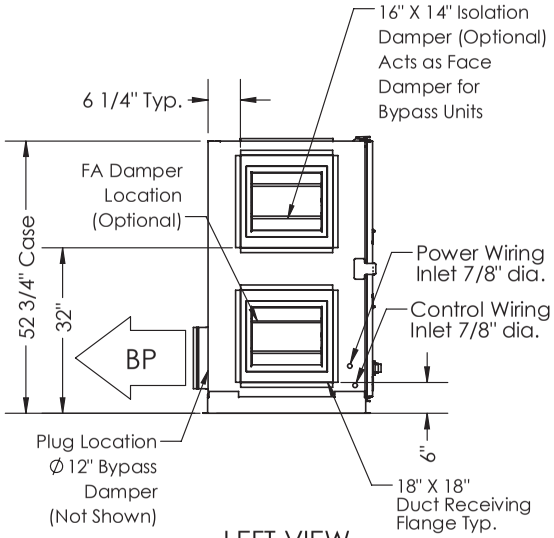

LEFT VIEW

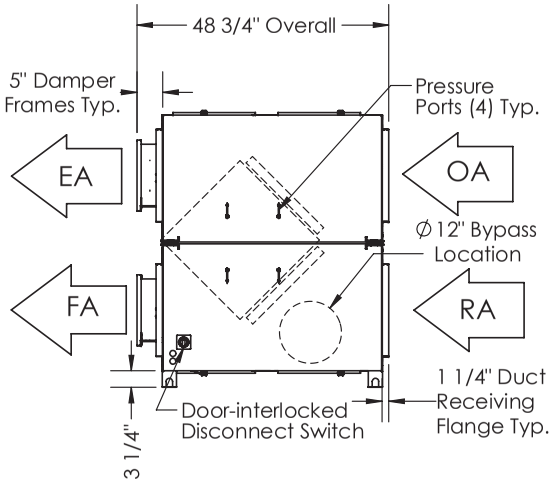

FRONT VIEW

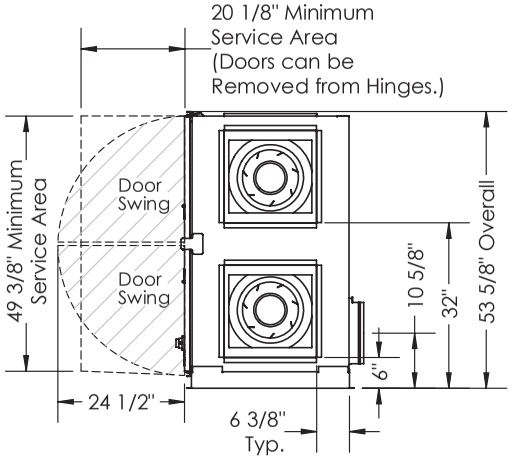

RIGHT VIEW

AIRFLOW CONFIGURATION
Available as shown in dimension drawing.

UNIT MOUNTING & APPLICATION
Can be mounted in any orientation. Airstreams can not be switched.

HE 1.5XINV

Energy Recovery Ventilator
Standard

INDOOR UNIT

HE1.5XINH shown

Download specification at:
renewaire.com/specifications

SPECIFICATIONS

Ventilation Type:
Static plate, heat and humidity transfer

Typical Airflow Range: 375-1,575 CFM

AHRI 1060 Certified Core:
One L62-G5 and one L125-G5

Standard Features:
Non-fused disconnect
24 VAC transformer/relay package
Cross-core differential pressure ports

Filters:
Total qty. 4, MERV 8: (2) 14" x 20" x 2" and (2) 16" x 20" x 2"

Unit Dimensions & Weight:
59 1/2" L x 34 1/2" W x 46 1/4" H
337-504 lbs., varies by option(s)

Max. Shipping Dimensions & Weight (on pallet):
70" L x 47" W x 59" H
571 lbs.

Motor(s):
Qty. 2, 1.0 HP ea., Direct drive standard motorized impeller packages

Options:
Qty. 2, Variable Speed/ECM - Direct drive motors (see HE1.5XINV EC Motor submittal) - 1.0 HP 120V/1Ph/60HZ, 1.0 HP 208-230V/1Ph/60HZ
Independent blower control
Fused disconnect
Integrated programmable controls - enhanced, premium
Bypass economizer damper (see bypass DIM drawing) - dry-bulb temperature controls (standard), enthalpy controls (option)
Class 1 low leakage motorized isolation dampers - FA, EA or both airstreams
Gravity backdraft dampers
Qty. 2, Factory mounted filter alarms - both airstreams
Double wall construction
Exterior paint - white, custom colors

Accessories:
Filters - MERV 13, 2" (shipped loose)
Backdraft damper - OA or EA
Digital time clock - wall mount (TC7D-W), in exterior enclosure (TC7D-E)
Carbon dioxide sensor/control - wall mount (CO2-W), duct mount (CO2-D)
IAQ sensor - wall mount (IAQ-W), duct mount (IAQ-D)
Motion occupancy sensor/control - ceiling mount (MC-C), wall mount (MC-W)
Smoke Detector - duct mount (SD-D)
Electric duct heater - EK series (1–175 kW)
Indirect gas-fired duct furnace - GH series (50-400 MBH), installed downstream of any fans

AIRFLOW PERFORMANCE

Motor HP Phase	External Static Pressure (Inches Water Column)						
	0.0	0.25	0.50	0.75	1.00	1.25	1.50
1.0 Single Phase	1,575 CFM 1,545 Watts	1,470 CFM 1,525 Watts	1,350 CFM 1,500 Watts	1,225 CFM 1,475 Watts	1,090 CFM 1,435 Watts	950 CFM 1,380 Watts	795 CFM 1,300 Watts
1.0 Three Phase	1,675 CFM 1,410 Watts	1,570 CFM 1,400 Watts	1,435 CFM 1,380 Watts	1,280 CFM 1,340 Watts	1,115 CFM 1,280 Watts	940 CFM 1,210 Watts	760 CFM 1,135 Watts

Note: Watts is for the entire unit (2 motors).
Note: Airflow performance includes effect of clean, standard filter supplied with unit.

ELECTRICAL DATA

HP	Volts	HZ	Phase	FLA per motor	Min. Cir. Amps	Max. Overcurrent Protection Device
1.0	120	60	Single	6.5	14.6	20
1.0	208-230	60	Single	3.3-3.4	7.7	15
1.0	277	60	Single	2.7	6.1	15
1.0	208-230	60	Three	2.2-2.2	5.0	15
1.0	460	60	Three	1.1	2.5	15

Specifications may be subject to change without notice.

HE1.5XINV Energy Recovery Ventilator Standard

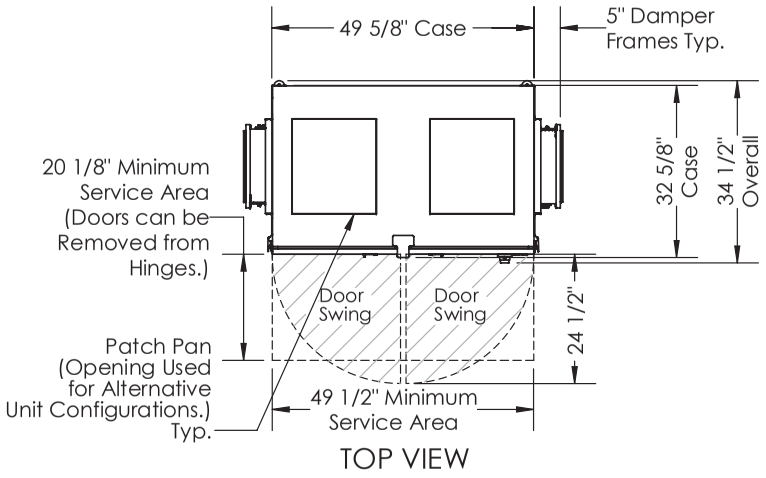

TOP VIEW

ABBREVIATIONS
EA: Exhaust Air to outside
OA: Outside Air intake
RA: Room Air to be exhausted
FA: Fresh Air to inside

INSTALLATION ORIENTATION
Unit may be installed in any orientation.

NOTE
1. UNLESS OTHERWISE SPECIFIED, DIMENSIONS ARE ROUNDED TO THE NEAREST EIGHTH OF AN INCH.

2. SPECIFICATIONS MAY BE SUBJECT TO CHANGE WITHOUT NOTICE.

3. MIN. DUCT CLEARANCE FROM DAMPER BLADE WHEN FULLY OPENED TO BE 2". SMACNA RULES APPLY.

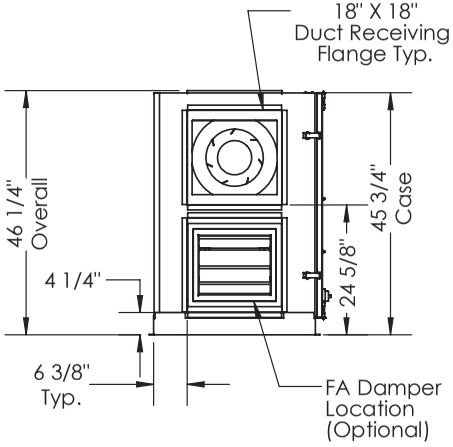

LEFT VIEW

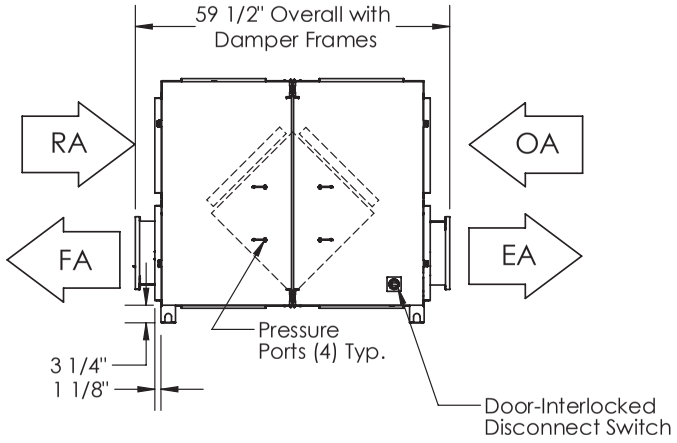

FRONT VIEW

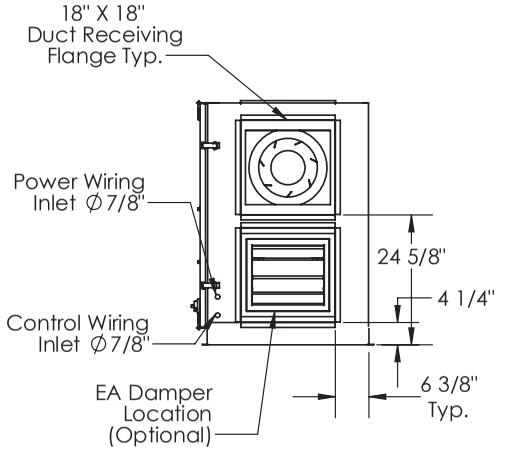

RIGHT VIEW

AIRFLOW CONFIGURATION
Available as shown in dimension drawing.

UNIT MOUNTING & APPLICATION
Can be mounted in any orientation. RA/EA airstream can be switched with OA/FA airstream unless certain options are selected. Duct configuration is field convertible.

HE 1.5XINV

Energy Recovery Ventilator
EC Motor Option

INDOOR UNIT

HE1.5XINH shown

Download specification at:
renewaire.com/specifications

SPECIFICATIONS

Ventilation Type:
Static plate, heat and humidity transfer

Typical Airflow Range: 375-1,575 CFM

AHRI 1060 Certified Core:
One L62-G5 and one L125-G5

Standard Features:
Non-fused disconnect
24 VAC transformer/relay package
Cross-core differential pressure ports

Filters:
Total qty. 4, MERV 8: (2) 14" x 20" x 2" and (2) 16" x 20" x 2"

Unit Dimensions & Weight:
59 1/2" L x 34 1/2" W x 46 1/4" H
336-504 lbs., varies by option(s)

Max. Shipping Dimensions & Weight (on pallet):
70" L x 47" W x 59" H
571 lbs.

Motor(s):
Qty. 2, 1.0 HP ea., Direct drive EC motorized impeller packages

Options:
Fused disconnect
Integrated programmable controls - enhanced, premium
Bypass economizer damper (see bypass DIM drawing) - dry-bulb temperature controls (standard), enthalpy controls (option)
Class 1 low leakage motorized isolation dampers - FA, EA or both airstreams
Gravity backdraft dampers
Qty. 2, Factory mounted filter alarms - both airstreams
Double wall construction
Exterior paint - white, custom colors

Accessories:
Filters - MERV 13, 2" (shipped loose)
Backdraft damper - OA or EA
Potentiometer speed control - remote installed
Digital time clock - wall mount (TC7D-W), in exterior enclosure (TC7D-E)
Carbon dioxide sensor/control - wall mount (CO2-W), duct mount (CO2-D)
IAQ sensor - wall mount (IAQ-W), duct mount (IAQ-D)
Motion occupancy sensor/control - ceiling mount (MC-C), wall mount (MC-W)
Smoke Detector - duct mount (SD-D)
Electric duct heater - EK series (1–175 kW)
Indirect gas-fired duct furnace - GH series (50-400 MBH), installed downstream of any fans

EC MOTOR OPTION OPERATING RANGE

HE1.5XINV EC MOTOR		
Sample Points Depicted in Larger Dots		
Airflow (CFM)	**External Static Pressure (Inches Water Column)**	**Unit Power Consumption (Watts)**
630	0.07	189
807	0.12	314
1014	0.20	502
1222	0.28	735
1430	0.39	1015
513	0.20	185
656	0.33	310
825	0.52	498
994	0.74	735
1163	1.01	1017

Note: Watts is for the entire unit.
Note: Airflow performance includes effect of clean, standard filter supplied with unit.

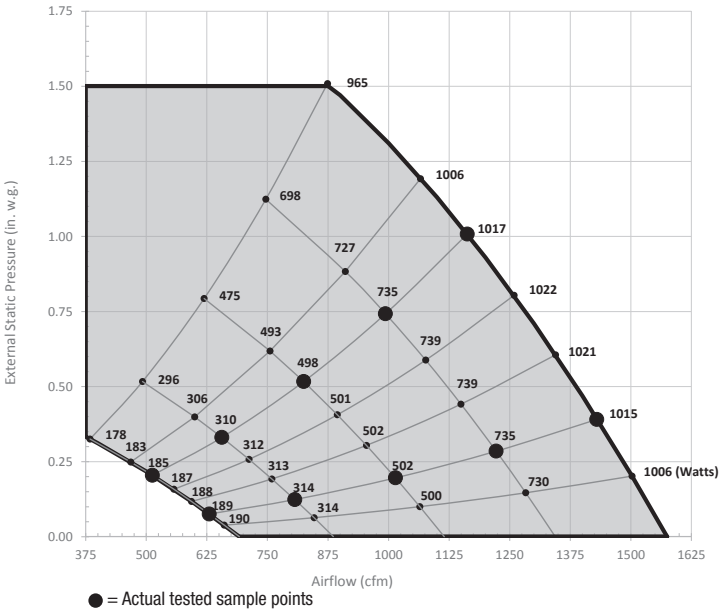

● = Actual tested sample points

ELECTRICAL DATA

HP	Volts	HZ	Phase	FLA per motor	Min. Cir. Amps	Max. Overcurrent Protection Device
1.0	120	60	Single	8.0	18.0	20
1.0	208-230	60	Single	6.2	14.0	15

Specifications may be subject to change without notice.

HE1.5XINV Energy Recovery Ventilator EC Motor Option

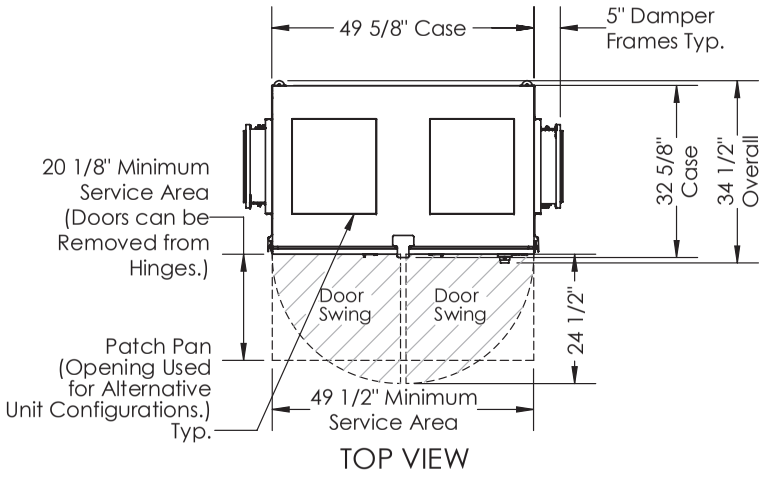

TOP VIEW

ABBREVIATIONS
EA: Exhaust Air to outside
OA: Outside Air intake
RA: Room Air to be exhausted
FA: Fresh Air to inside

INSTALLATION ORIENTATION
Unit may be installed in any orientation.

NOTE
1. UNLESS OTHERWISE SPECIFIED, DIMENSIONS ARE ROUNDED TO THE NEAREST EIGHTH OF AN INCH.

2. SPECIFICATIONS MAY BE SUBJECT TO CHANGE WITHOUT NOTICE.

3. MIN. DUCT CLEARANCE FROM DAMPER BLADE WHEN FULLY OPENED TO BE 2". SMACNA RULES APPLY.

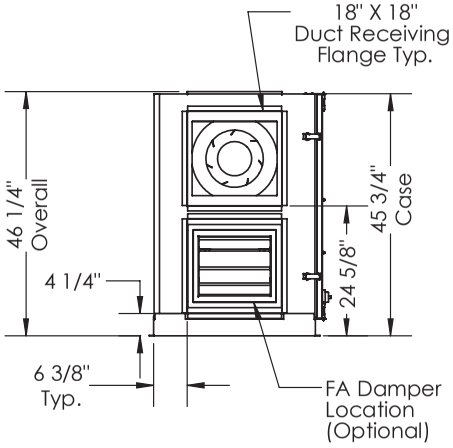

LEFT VIEW

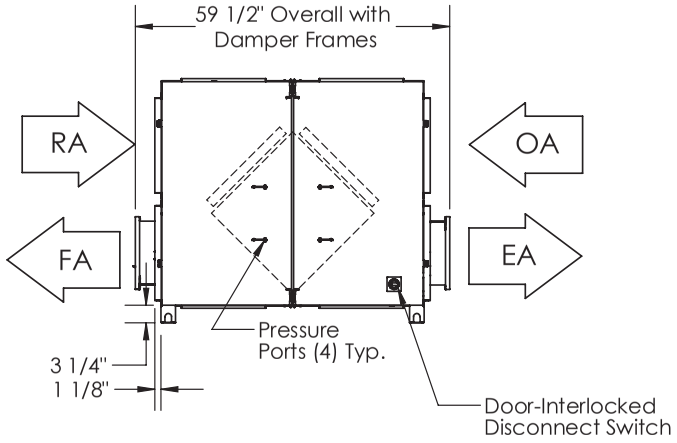

FRONT VIEW

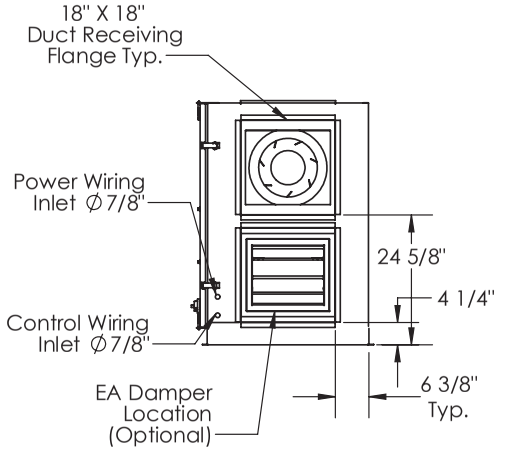

RIGHT VIEW

AIRFLOW CONFIGURATION
Available as shown in dimension drawing.

UNIT MOUNTING & APPLICATION
Can be mounted in any orientation. RA/EA airstream can be switched with OA/FA airstream unless certain options are selected. Duct configuration is field convertible.

HE 1.5XINV

Energy Recovery Ventilator
Standard with Bypass Economizer

INDOOR UNIT

HE1.5XINH shown

Download specification at:
renewaire.com/specifications

SPECIFICATIONS

Ventilation Type:
Static plate, heat and humidity transfer

Typical Airflow Range: 375-1,575 CFM

AHRI 1060 Certified Core:
One L62-G5 and one L125-G5

Standard Features:
Non-fused disconnect
24 VAC transformer/relay package
Cross-core differential pressure ports

Filters:
Total qty. 4, MERV 8: (2) 14" x 20" x 2" and (2) 16" x 20" x 2"

Unit Dimensions & Weight:
59 1/2" L x 34 1/2" W x 46 1/4" H
337-504 lbs., varies by option(s)

Max. Shipping Dimensions & Weight (on pallet):
70" L x 47" W x 59" H
571 lbs.

Motor(s):
Qty. 2, 1.0 HP ea., Direct drive standard motorized impeller packages

Options:
Qty. 2, Variable Speed/ECM - Direct drive motors (see HE1.5XINV EC Motor submittal) - 1.0 HP 120V/1Ph/60HZ, 1.0 HP 208-230V/1Ph/60HZ
Independent blower control
Fused disconnect
Integrated programmable controls - enhanced, premium
Bypass economizer damper (see bypass DIM drawing) - dry-bulb temperature controls (standard), enthalpy controls (option)
Class 1 low leakage motorized isolation dampers - FA, EA or both airstreams
Gravity backdraft dampers
Qty. 2, Factory mounted filter alarms - both airstreams
Double wall construction
Exterior paint - white, custom colors

Accessories:
Filters - MERV 13, 2" (shipped loose)
Backdraft damper - OA or EA
Digital time clock - wall mount (TC7D-W), in exterior enclosure (TC7D-E)
Carbon dioxide sensor/control - wall mount (CO2-W), duct mount (CO2-D)
IAQ sensor - wall mount (IAQ-W), duct mount (IAQ-D)
Motion occupancy sensor/control - ceiling mount (MC-C), wall mount (MC-W)
Smoke Detector - duct mount (SD-D)
Electric duct heater - EK series (1–175 kW)
Indirect gas-fired duct furnace - GH series (50-400 MBH), installed downstream of any fans

AIRFLOW PERFORMANCE

Motor HP Phase	External Static Pressure (Inches Water Column)						
	0.0	0.25	0.50	0.75	1.00	1.25	1.50
1.0 Single Phase	1,575 CFM 1,545 Watts	1,470 CFM 1,525 Watts	1,350 CFM 1,500 Watts	1,225 CFM 1,475 Watts	1,090 CFM 1,435 Watts	950 CFM 1,380 Watts	795 CFM 1,300 Watts
1.0 Three Phase	1,675 CFM 1,410 Watts	1,570 CFM 1,400 Watts	1,435 CFM 1,380 Watts	1,280 CFM 1,340 Watts	1,115 CFM 1,280 Watts	940 CFM 1,210 Watts	760 CFM 1,135 Watts

Note: Watts is for the entire unit (2 motors).
Note: Airflow performance includes effect of clean, standard filter supplied with unit.

ELECTRICAL DATA

HP	Volts	HZ	Phase	FLA per motor	Min. Cir. Amps	Max. Overcurrent Protection Device
1.0	120	60	Single	6.5	14.6	20
1.0	208-230	60	Single	3.3-3.4	7.7	15
1.0	277	60	Single	2.7	6.1	15
1.0	208-230	60	Three	2.2-2.2	5.0	15
1.0	460	60	Three	1.1	2.5	15

Specifications may be subject to change without notice.

HE1.5XINV Energy Recovery Ventilator Standard with Bypass Economizer

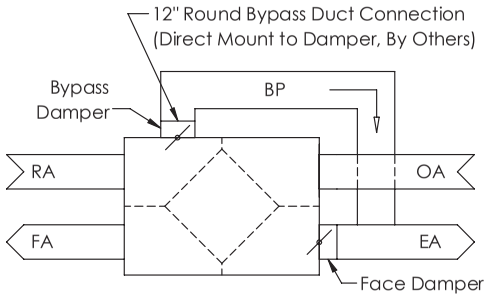

BYPASS AIRFLOW SCHEMATIC
FRONT VIEW

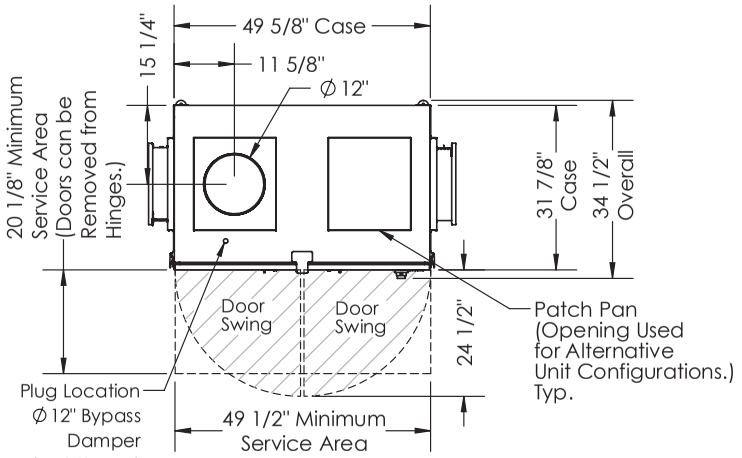

TOP VIEW

ABBREVIATIONS
EA: Exhaust Air to outside
OA: Outside Air intake
RA: Room Air to be exhausted
FA: Fresh Air to inside
BP: Bypass Air outlet

INSTALLATION ORIENTATION
Unit may be installed in any orientation.

NOTE
1. UNLESS OTHERWISE SPECIFIED, DIMENSIONS ARE ROUNDED TO THE NEAREST EIGHTH OF AN INCH.

2. SPECIFICATIONS MAY BE SUBJECT TO CHANGE WITHOUT NOTICE.

3. MIN. DUCT CLEARANCE FROM DAMPER BLADE WHEN FULLY OPENED TO BE 2". SMACNA RULES APPLY.

4. UNITS WITH BYPASS WILL REQUIRE ADDITIONAL SPACE FOR THE CONNECTION OF THE BYPASS DUCT (BY OTHERS).

5. FOR INSTALLATION DETAILS, REFER TO I&O MANUAL SUPPLEMENT FOR BYPASS.

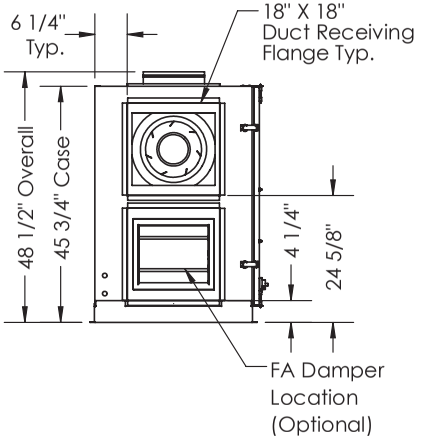

LEFT VIEW

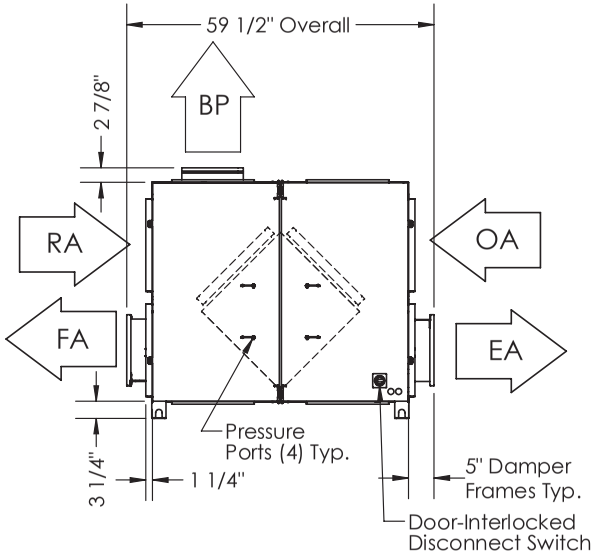

FRONT VIEW

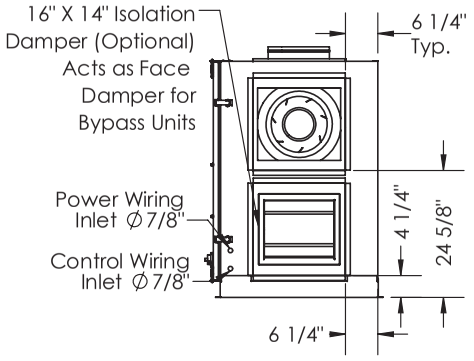

RIGHT VIEW

AIRFLOW CONFIGURATION
Available as shown in dimension drawing.

UNIT MOUNTING & APPLICATION
Can be mounted in any orientation. Airstreams can not be switched.

HE 1.5XINV

Energy Recovery Ventilator
EC Motor with Bypass Economizer

INDOOR UNIT

HE1.5XINH shown

Download specification at:
renewaire.com/specifications

SPECIFICATIONS

Ventilation Type:
Static plate, heat and humidity transfer

Typical Airflow Range: 375-1,575 CFM

AHRI 1060 Certified Core:
One L62-G5 and one L125-G5

Standard Features:
Non-fused disconnect
24 VAC transformer/relay package
Cross-core differential pressure ports

Filters:
Total qty. 4, MERV 8: (2) 14" x 20" x 2" and (2) 16" x 20" x 2"

Unit Dimensions & Weight:
59 1/2" L x 34 1/2" W x 46 1/4" H
336-504 lbs., varies by option(s)

Max. Shipping Dimensions & Weight (on pallet):
70" L x 47" W x 59" H
571 lbs.

Motor(s):
Qty. 2, 1.0 HP ea., Direct drive EC motorized impeller packages

Options:
Fused disconnect
Integrated programmable controls - enhanced, premium
Bypass economizer damper (see bypass DIM drawing) - dry-bulb temperature controls (standard), enthalpy controls (option)
Class 1 low leakage motorized isolation dampers - FA, EA or both airstreams
Gravity backdraft dampers
Qty. 2, Factory mounted filter alarms - both airstreams
Double wall construction
Exterior paint - white, custom colors

Accessories:
Filters - MERV 13, 2" (shipped loose)
Backdraft damper - OA or EA
Potentiometer speed control - remote installed
Digital time clock - wall mount (TC7D-W), in exterior enclosure (TC7D-E)
Carbon dioxide sensor/control - wall mount (CO2-W), duct mount (CO2-D)
IAQ sensor - wall mount (IAQ-W), duct mount (IAQ-D)
Motion occupancy sensor/control - ceiling mount (MC-C), wall mount (MC-W)
Smoke Detector - duct mount (SD-D)
Electric duct heater - EK series (1–175 kW)
Indirect gas-fired duct furnace - GH series (50-400 MBH), installed downstream of any fans

EC MOTOR OPTION OPERATING RANGE

HE1.5XINV EC MOTOR		
Sample Points Depicted in Larger Dots		
Airflow (CFM)	External Static Pressure (Inches Water Column)	Unit Power Consumption (Watts)
630	0.07	189
807	0.12	314
1014	0.20	502
1222	0.28	735
1430	0.39	1015
513	0.20	185
656	0.33	310
825	0.52	498
994	0.74	735
1163	1.01	1017

Note: Watts is for the entire unit.
Note: Airflow performance includes effect of clean, standard filter supplied with unit.

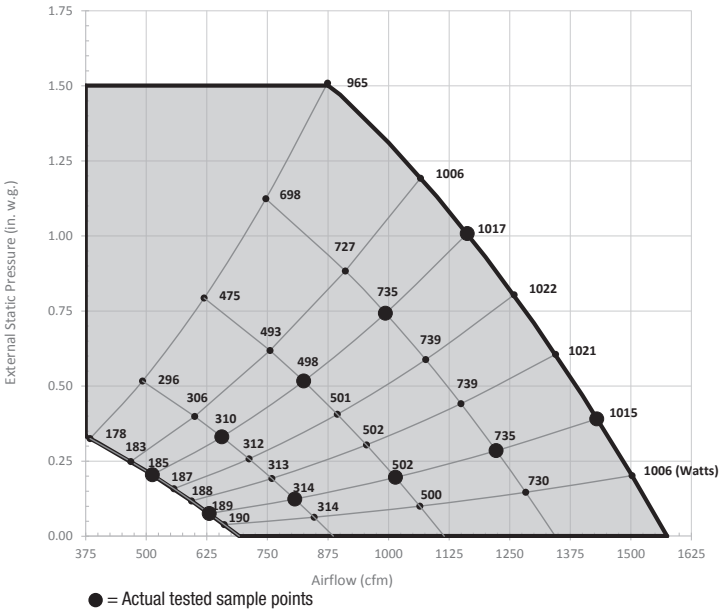

● = Actual tested sample points

ELECTRICAL DATA

HP	Volts	HZ	Phase	FLA per motor	Min. Cir. Amps	Max. Overcurrent Protection Device
1.0	120	60	Single	8.0	18.0	20
1.0	208-230	60	Single	6.2	14.0	15

Specifications may be subject to change without notice.

HE1.5XINV Energy Recovery Ventilator EC Motor with Bypass Economizer

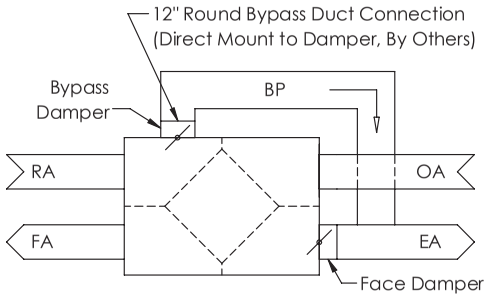

BYPASS AIRFLOW SCHEMATIC
FRONT VIEW

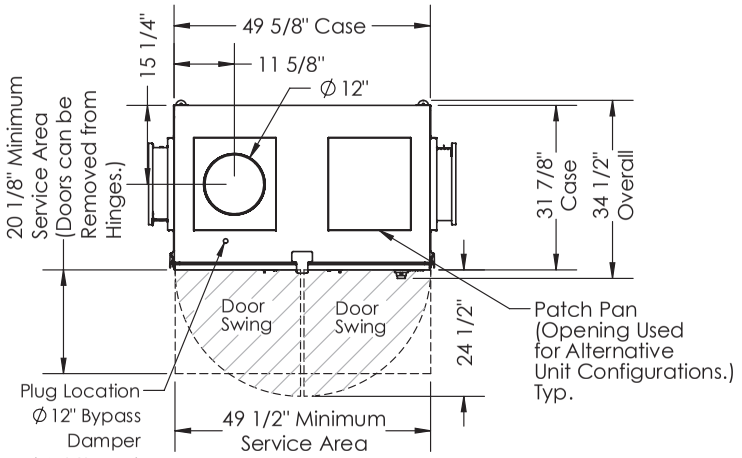

TOP VIEW

ABBREVIATIONS
EA: Exhaust Air to outside
OA: Outside Air intake
RA: Room Air to be exhausted
FA: Fresh Air to inside
BP: Bypass Air outlet

INSTALLATION ORIENTATION
Unit may be installed in any orientation.

NOTE
1. UNLESS OTHERWISE SPECIFIED, DIMENSIONS ARE ROUNDED TO THE NEAREST EIGHTH OF AN INCH.

2. SPECIFICATIONS MAY BE SUBJECT TO CHANGE WITHOUT NOTICE.

3. MIN. DUCT CLEARANCE FROM DAMPER BLADE WHEN FULLY OPENED TO BE 2". SMACNA RULES APPLY.

4. UNITS WITH BYPASS WILL REQUIRE ADDITIONAL SPACE FOR THE CONNECTION OF THE BYPASS DUCT (BY OTHERS).

5. FOR INSTALLATION DETAILS, REFER TO I&O MANUAL SUPPLEMENT FOR BYPASS.

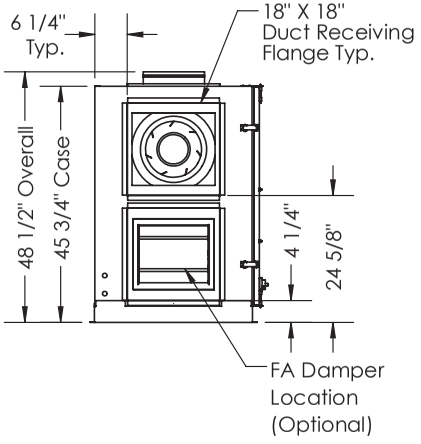

LEFT VIEW

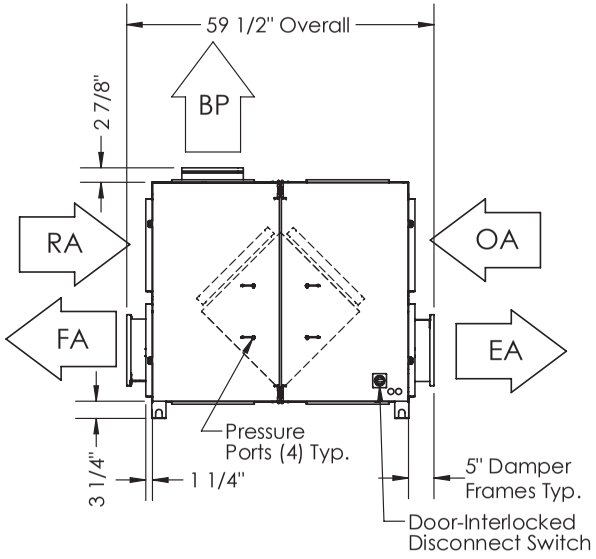

FRONT VIEW

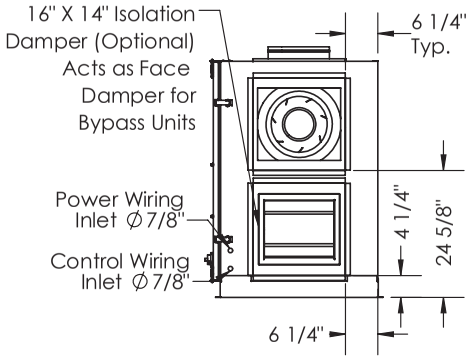

RIGHT VIEW

AIRFLOW CONFIGURATION
Available as shown in dimension drawing.

UNIT MOUNTING & APPLICATION
Can be mounted in any orientation. Airstreams can not be switched.

HE 1.5XRT

Energy Recovery Ventilator
Standard

ROOFTOP UNIT

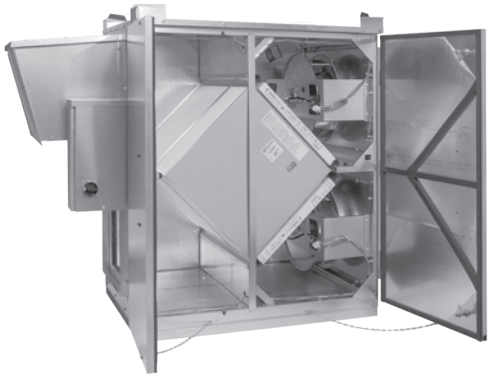

Download specification at:
renewaire.com/specifications

SPECIFICATIONS

Ventilation Type:
Static plate, heat and humidity transfer

Typical Airflow Range: 375-1,575 CFM

AHRI 1060 Certified Core:
One L62-G5 and one L125-G5

Standard Features:
Non-fused disconnect
24 VAC transformer/relay package
Cross-core differential pressure ports

Filters:
Total qty. 4, MERV 8: (2) 14" x 20" x 2" and (2) 16" x 20" x 2"

Unit Dimensions & Weight:
86" L x 33 1/4" W x 56 3/4" H
387-548 lbs., varies by option(s)

Max. Shipping Dimensions & Weight (on pallet):
70" L x 47" W x 83" H
615 lbs.

Motor(s):
Qty. 2, 1.0 HP ea., Direct drive standard motorized impeller packages

Options:
Qty. 2, Variable Speed/ECM - Direct drive motors (see HE1.5XRT EC Motor submittal) - 1.0 HP 120V/1Ph/60HZ, 1.0 HP 208-230V/1Ph/60HZ
Independent blower control
Onboard variable frequency drives (VFDs) - one or both airstreams
Fused disconnect
Integrated programmable controls - enhanced, premium
Class 1 low leakage motorized isolation dampers - FA, EA or both airstreams
Gravity backdraft dampers
Qty. 2, Factory mounted filter alarms - both airstreams
Double wall construction
Exterior paint - white, custom colors

Accessories:
Filters - MERV 13, 2" (shipped loose)
Backdraft damper - OA or EA
Roof curb - standard 14"
Curb wind clip
Engineered combo curb for Carrier RTU
Engineered combo curb for Trane RTU
Digital time clock - wall mount (TC7D-W), in exterior enclosure (TC7D-E)
Carbon dioxide sensor/control - wall mount (CO2-W), duct mount (CO2-D)
IAQ sensor - wall mount (IAQ-W), duct mount (IAQ-D)
Motion occupancy sensor/control - ceiling mount (MC-C), wall mount (MC-W)
Smoke Detector - duct mount (SD-D)
Electric duct heater - EK series (1–175 kW); designed for indoor ductwork installation only
Indirect gas-fired duct furnace - GH series (50-400 MBH), installed downstream of any fans

AIRFLOW PERFORMANCE

Motor HP Phase	External Static Pressure (Inches Water Column)						
	0.0	0.25	0.50	0.75	1.00	1.25	1.50
1.0 Single Phase	1,535 CFM 1,540 Watts	1390 CFM 1515 Watts	1255 CFM 1485 Watts	1120 CFM 1445 Watts	970 CFM 1395 Watts	815 CFM 1310 Watts	640 CFM 1195 Watts
1.0 Three Phase	1,630 CFM 1,440 Watts	1485 CFM 1435 Watts	1335 CFM 1415 Watts	1170 CFM 1375 Watts	995 CFM 1325 Watts	810 CFM 1260 Watts	615 CFM 1180 Watts

Note: Watts is for the entire unit (2 motors).
Note: Airflow performance includes effect of clean, standard filter supplied with unit.

ELECTRICAL DATA

Standard Electrical Specifications							Optional Factory Installed VFD Electrical Specifications		
HP	Volts	HZ	Phase	FLA per motor	Min. Cir. Amps	Max. Overcurrent Protection Device	FLA per motor	Min. Cir. Amps	Max. Overcurrent Protection Device
1.0	120	60	Single	6.5	14.6	20			
1.0	208-230	60	Single	3.3-3.4	7.7	15			
1.0	277	60	Single	2.7	6.1	15			
1.0	208-230	60	Three	2.2-2.2	5.0	15	2.2 - 2.2	5.4	15
1.0	460	60	Three	1.1	2.5	15	1.1	2.8	15

Specifications may be subject to change without notice.

HE1.5XRT (RTV/RTR) Energy Recovery Ventilator Standard

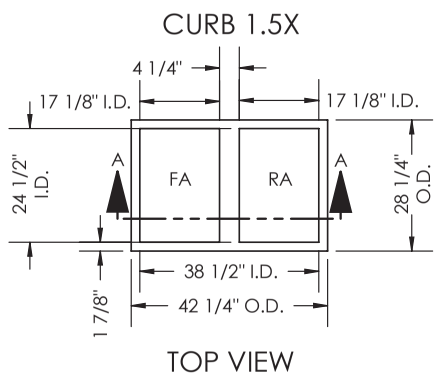

TOP VIEW

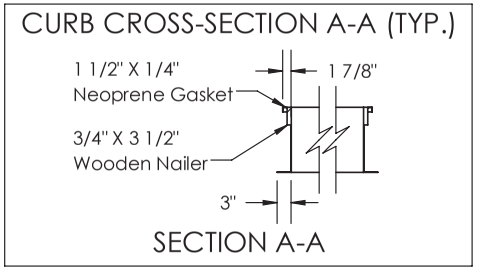

SECTION A-A

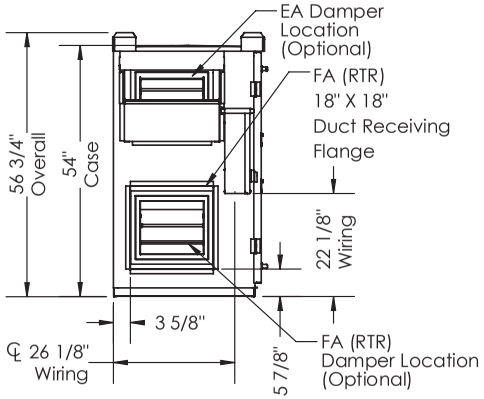

LEFT VIEW

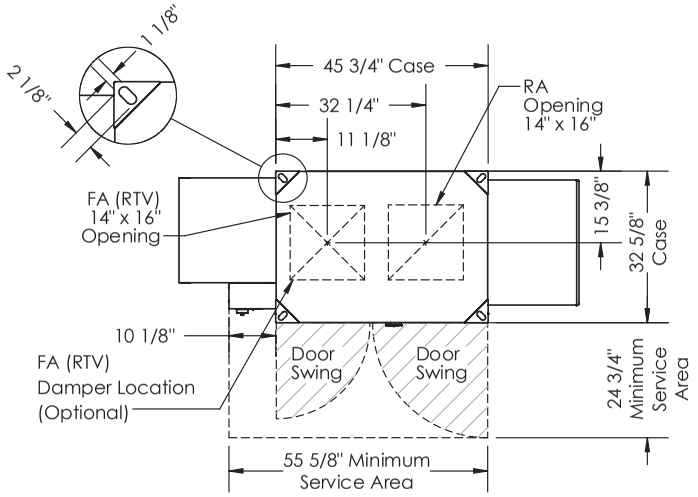

TOP VIEW

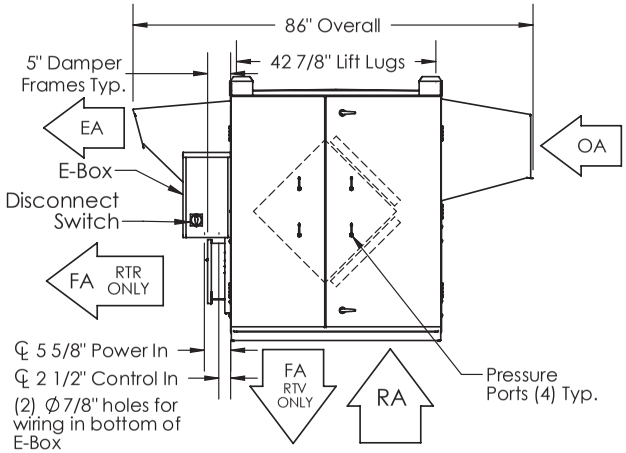

FRONT VIEW

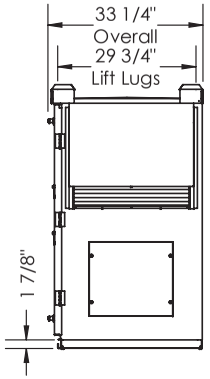

RIGHT VIEW

ABBREVIATIONS
EA: Exhaust Air to outside
OA: Outside Air intake
RA: Room Air to be exhausted
FA: Fresh Air to inside
RTV: Rooftop Vertical RA & FA
RTR: Rooftop Vertical RA Only

INSTALLATION ORIENTATION
Unit must be installed in orientation shown.

NOTE:
1. UNLESS OTHERWISE SPECIFIED, DIMENSIONS ARE ROUNDED TO THE NEAREST EIGHTH OF AN INCH.

2. SPECIFICATIONS MAY BE SUBJECT TO CHANGE WITHOUT NOTICE.

AIRFLOW CONFIGURATION

Available as shown:

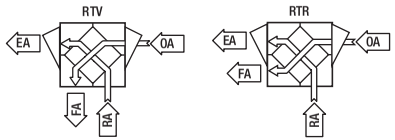

UNIT MOUNTING & APPLICATION

Must be mounted as shown. Airstreams can not be switched. Duct configuration is field convertible.

HE1.5XRT (RTH/RTF) Energy Recovery Ventilator Standard

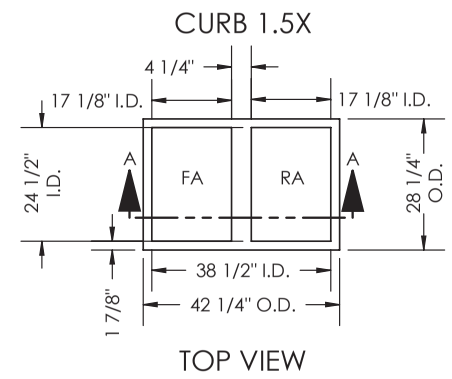

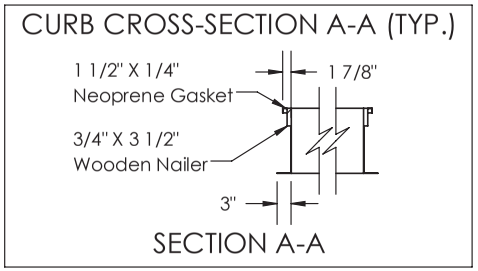

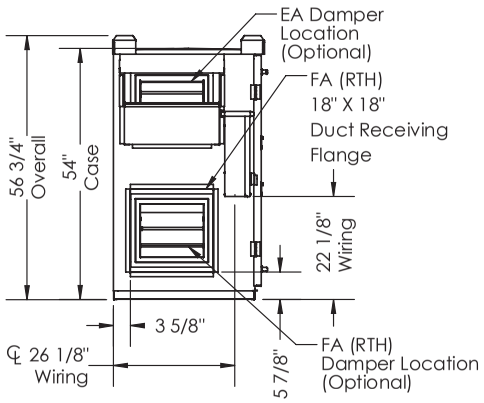

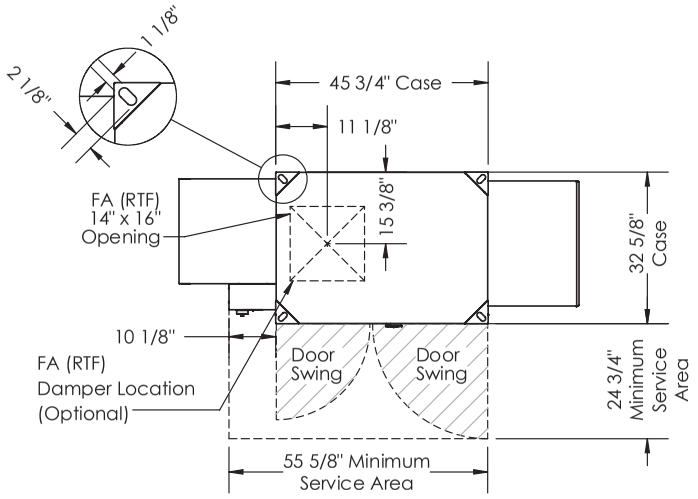

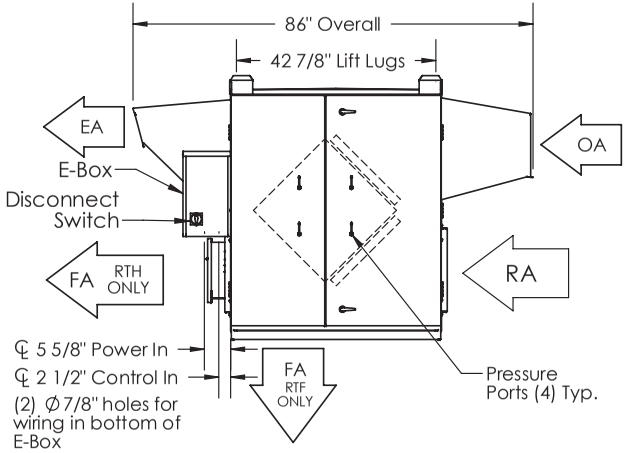

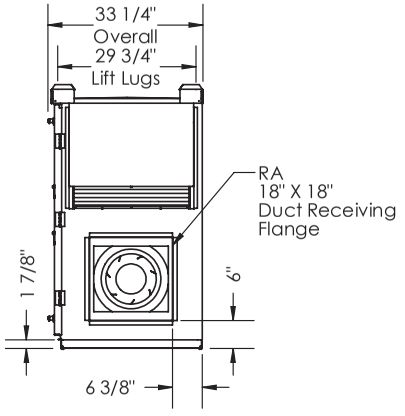

ABBREVIATIONS
EA: Exhaust Air to outside
OA: Outside Air intake
RA: Room Air to be exhausted
FA: Fresh Air to inside
RTF: Rooftop Vertical FA Only
RTH: Rooftop Horizontal RA & FA

INSTALLATION ORIENTATION
Unit must be installed in orientation shown.

NOTE:
1. UNLESS OTHERWISE SPECIFIED, DIMENSIONS ARE ROUNDED TO THE NEAREST EIGHTH OF AN INCH.

2. SPECIFICATIONS MAY BE SUBJECT TO CHANGE WITHOUT NOTICE.

AIRFLOW CONFIGURATION

Available as shown:

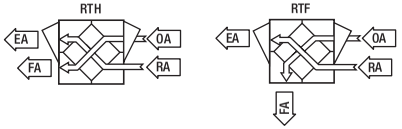

UNIT MOUNTING & APPLICATION

Must be mounted as shown. Airstreams can not be switched. Duct configuration is field convertible.

THIS PAGE IS INTENTIONALLY LEFT BLANK.

HE 1.5XRT

Energy Recovery Ventilator
EC Motor Option

AHRI CERTIFIED www.ahridirectory.org Globally Recognized. Industry Respected.

C ETL LISTED US Intertek

ROOFTOP UNIT

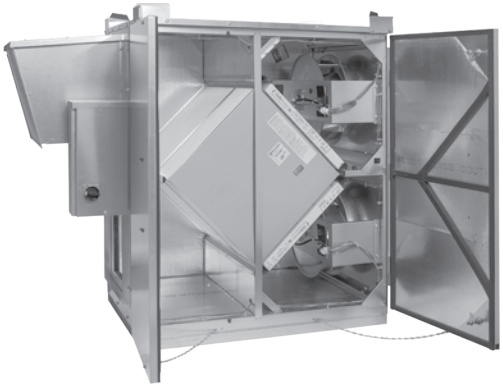

Download specification at:
renewaire.com/specifications

SPECIFICATIONS

Ventilation Type:
Static plate, heat and humidity transfer

Typical Airflow Range: 375-1,525 CFM

AHRI 1060 Certified Core:
One L62-G5 and one L125-G5

Standard Features:
Non-fused disconnect
24 VAC transformer/relay package
Cross-core differential pressure ports

Filters:
Total qty. 4, MERV 8: (2) 14" x 20" x 2" and (2) 16" x 20" x 2"

Unit Dimensions & Weight:
86" L x 33 1/4" W x 56 3/4" H
386-548 lbs., varies by option(s)

Max. Shipping Dimensions & Weight (on pallet):
70" L x 47" W x 83" H
615 lbs.

Motor(s):
Qty. 2, 1.0 HP ea., Direct drive EC motorized impeller packages

Options:
Fused disconnect
Integrated programmable controls - enhanced, premium
Class 1 low leakage motorized isolation dampers - FA, EA or both airstreams
Gravity backdraft dampers
Qty. 2, Factory mounted filter alarms - both airstreams
Double wall construction
Exterior paint - white, custom colors

Accessories:
Filters - MERV 13, 2" (shipped loose)
Backdraft damper - OA or EA
Potentiometer speed control - remote installed
Roof curb - standard 14"
Curb wind clip
Engineered combo curb for Carrier RTU
Engineered combo curb for Trane RTU
Digital time clock - wall mount (TC7D-W), in exterior enclosure (TC7D-E)
Carbon dioxide sensor/control - wall mount (CO2-W), duct mount (CO2-D)
IAQ sensor - wall mount (IAQ-W), duct mount (IAQ-D)
Motion occupancy sensor/control - ceiling mount (MC-C), wall mount (MC-W)
Smoke Detector - duct mount (SD-D)
Electric duct heater - EK series (1–175 kW); designed for indoor ductwork installation only
Indirect gas-fired duct furnace - GH series (50-400 MBH), installed downstream of any fans

EC MOTOR OPTION OPERATING RANGE

HE1.5XRT EC MOTOR		
Sample Points Depicted in Larger Dots		
Airflow (CFM)	**External Static Pressure (Inches Water Column)**	**Unit Power Consumption (Watts)**
593	0.07	188
760	0.12	313
955	0.20	502
1151	0.29	739
1347	0.39	1021
453	0.20	182
577	0.33	304
725	0.51	489
874	0.74	722
1026	1.01	1000

Note: Watts is for the entire unit.
Note: Airflow performance includes effect of clean, standard filter supplied with unit.

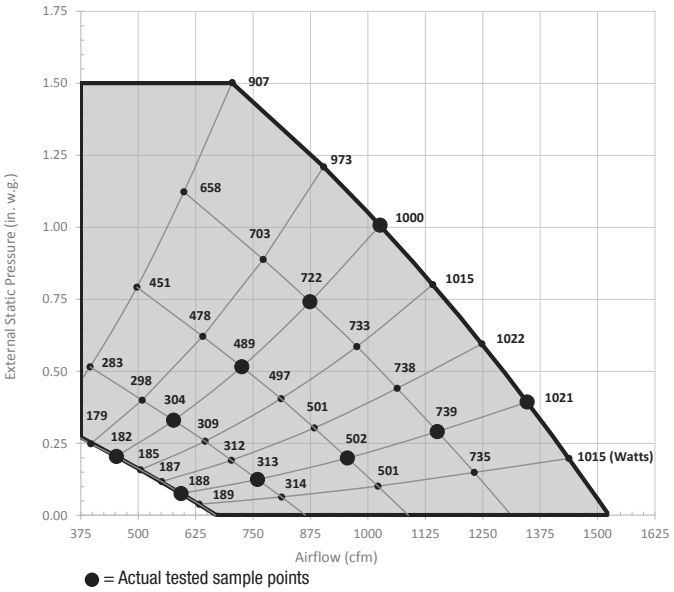

ELECTRICAL DATA

HP	Volts	HZ	Phase	FLA per motor	Min. Cir. Amps	Max. Overcurrent Protection Device
1.0	120	60	Single	8.0	18.0	20
1.0	208-230	60	Single	6.2	14.0	15

Specifications may be subject to change without notice.

RenewAire Energy Recovery Ventilation

HE1.5XRT (RTV/RTR) Energy Recovery Ventilator EC Motor Option

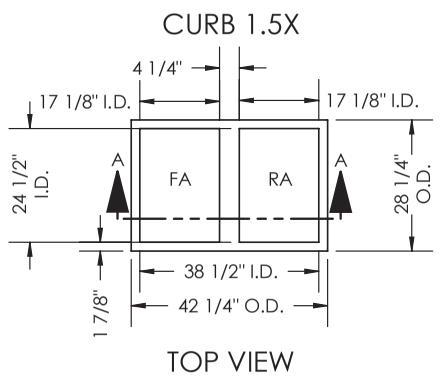

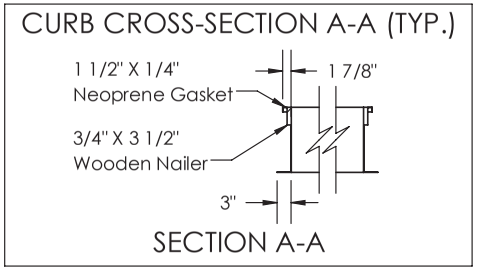

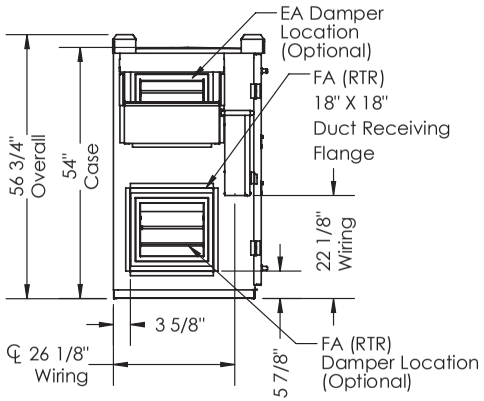

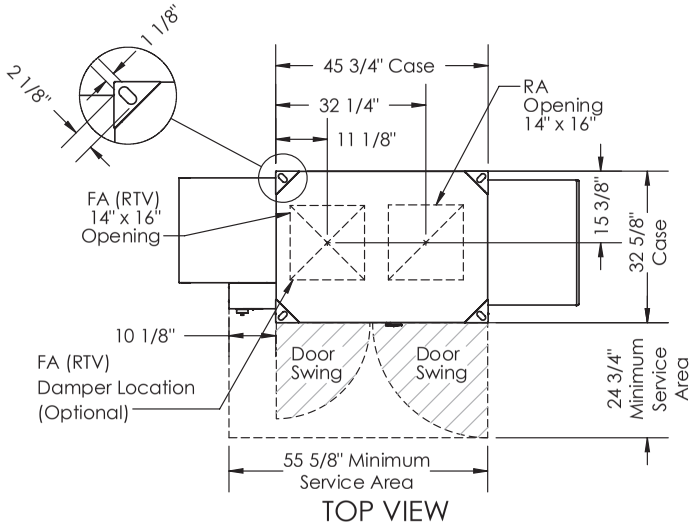

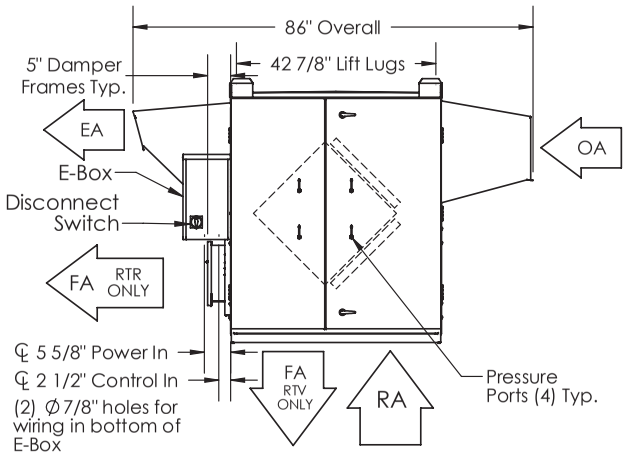

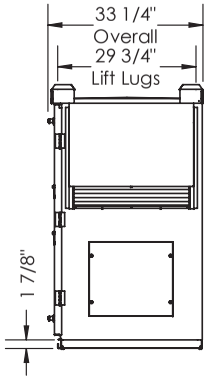

ABBREVIATIONS
EA: Exhaust Air to outside
OA: Outside Air intake
RA: Room Air to be exhausted
FA: Fresh Air to inside
RTV: Rooftop Vertical RA & FA
RTR: Rooftop Vertical RA Only

INSTALLATION ORIENTATION
Unit must be installed in orientation shown.

NOTE:
1. UNLESS OTHERWISE SPECIFIED, DIMENSIONS ARE ROUNDED TO THE NEAREST EIGHTH OF AN INCH.

2. SPECIFICATIONS MAY BE SUBJECT TO CHANGE WITHOUT NOTICE.

AIRFLOW CONFIGURATION

Available as shown:

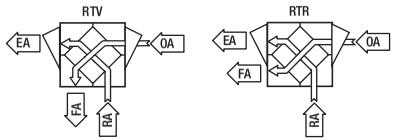

UNIT MOUNTING & APPLICATION

Must be mounted as shown. Airstreams can not be switched. Duct configuration is field convertible.

HE1.5XRT (RTH/RTF) Energy Recovery Ventilator EC Motor Option

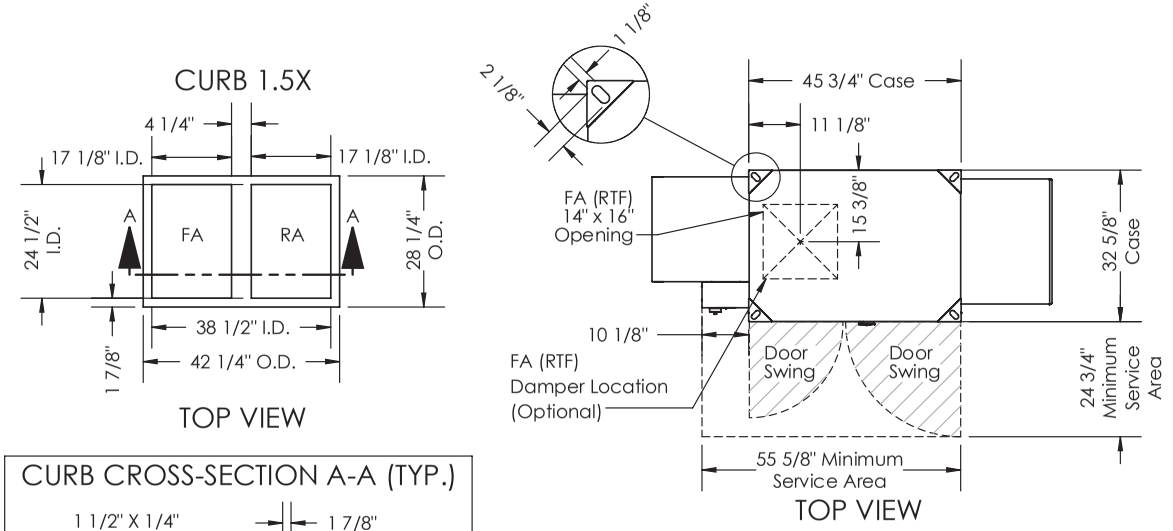

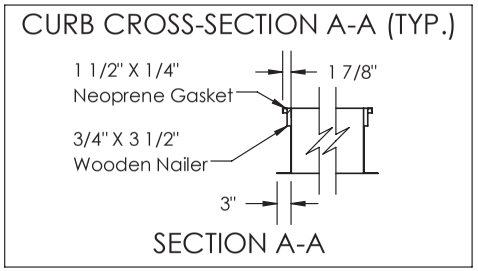

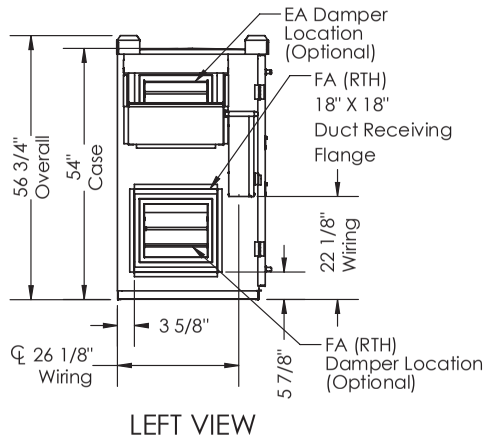

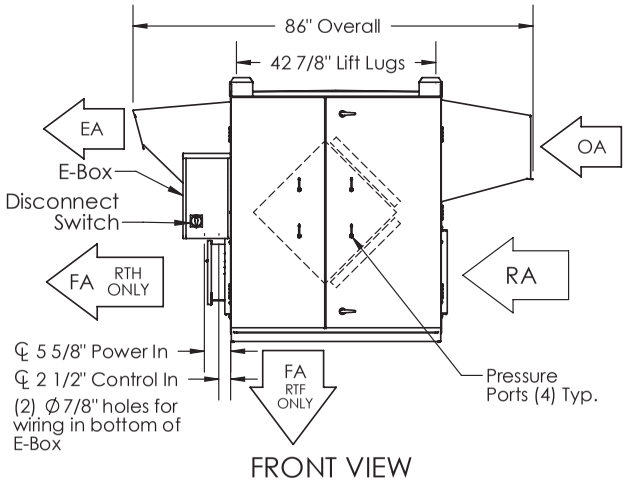

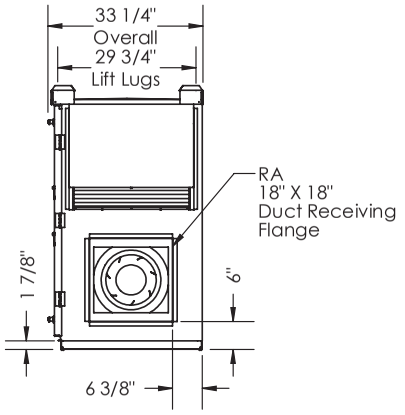

ABBREVIATIONS
EA: Exhaust Air to outside
OA: Outside Air intake
RA: Room Air to be exhausted
FA: Fresh Air to inside
RTF: Rooftop Vertical FA Only
RTH: Rooftop Horizontal RA & FA

INSTALLATION ORIENTATION
Unit must be installed in orientation shown.

NOTE:
1. UNLESS OTHERWISE SPECIFIED, DIMENSIONS ARE ROUNDED TO THE NEAREST EIGHTH OF AN INCH.

2. SPECIFICATIONS MAY BE SUBJECT TO CHANGE WITHOUT NOTICE.

AIRFLOW CONFIGURATION

Available as shown:

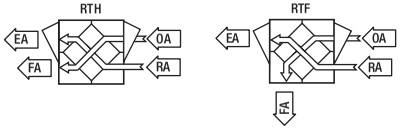

UNIT MOUNTING & APPLICATION

Must be mounted as shown. Airstreams can not be switched. Duct configuration is field convertible.

THIS PAGE IS INTENTIONALLY LEFT BLANK.

HE 2XINH

Energy Recovery Ventilator
Standard

AHRI CERTIFIED® www.ahridirectory.org
Globally Recognized. Industry Respected.

c UL us LISTED DUCTED HEAT RECOVERY VENTILATOR 89S5

INDOOR UNIT

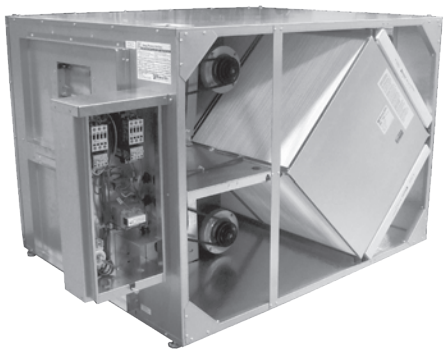

Download specification at:
renewaire.com/specifications

SPECIFICATIONS

Ventilation Type:
Static plate, heat and humidity transfer

Typical Airflow Range: 500-2,200 CFM

AHRI 1060 Certified Core: Two L125-G5

Standard Features:
TEFC Premium efficiency motors
Motor starters
Non-fused disconnect
24 VAC transformer/relay package
Cross-core differential pressure ports

Filters:
Total qty. 4, MERV 8: 20" x 20" x 2"

Unit Dimensions & Weight:
64 1/2" L x 43" W x 35 1/2" H
406-619 lbs., varies by option(s)

Max. Shipping Dimensions & Weight (on pallet):
70" L x 47" W x 40" H
714 lbs.

Motor(s):
Qty. 2, Belt drive blower/standard motor packages with adjustable sheaves (see table below)

Options:
Onboard variable frequency drives (VFDs) - one or both airstreams
Shaft grounding ring on motors with VFDs
Fused disconnect
Integrated programmable controls - enhanced, premium
Bypass economizer damper (see bypass DIM drawing) - dry-bulb temperature controls (standard), enthalpy controls (option)
Class 1 low leakage motorized isolation dampers - OA, RA or both airstreams
Qty. 2, Factory mounted filter alarms - both airstreams
Double wall construction
Exterior paint - white, custom colors

Accessories:
Filters - MERV 13, 2" (shipped loose)
Digital time clock - wall mount (TC7D-W), in exterior enclosure (TC7D-E)
Carbon dioxide sensor/control - wall mount (CO2-W), duct mount (CO2-D)
IAQ sensor - wall mount (IAQ-W), duct mount (IAQ-D)
Motion occupancy sensor/control - ceiling mount (MC-C), wall mount (MC-W)
Smoke Detector - duct mount (SD-D)
Electric duct heater - EK series (1–175 kW)
Indirect gas-fired duct furnace - GH series (50-400 MBH), installed downstream of any fans

AIRFLOW PERFORMANCE

Motor HP	Blower RPM	Sheave Adj. Turns Open	External Static Pressure (in. w.g.)													
			0.00		0.25		0.50		0.75		1.00		1.25		1.50	
			SCFM	BHP	SCFM	BHP	SCFM	BHP	SCFM	BHP	SCFM	BHP	SCFM	BHP	SCFM	BHP
1.5	1148	4	1592	0.7	1480	0.7	1320	0.6	1120	0.5	800	0.4				
	1304	2	1809	1.0	1720	1.0	1600	0.9	1410	0.8	1250	0.7	975	0.6	630	0.4
	1460	0	2025	1.5	1950	1.4	1845	1.3	1715	1.2	1540	1.1	1400	1.0	1165	0.8
2.0	1506	2	2130	1.6	2050	1.5	1955	1.4	1840	1.3	1735	1.2	1585	1.0	1360	0.9
	1584	1			2170	1.8	2080	1.7	1970	1.5	1870	1.4	1765	1.3	1565	1.1
	1661	0					2200	1.9	2100	1.8	2000	1.7	1900	1.5	1765	1.4

Note: Brake Horse Power (BHP) is for one blower motor package only. **Operation in this zone will likely exceed FLA limits.** **Operation in this zone outside of core airflow limits.**

Note: Airflow performance includes effect of clean, standard filter supplied with unit.

ELECTRICAL DATA

Standard Electrical Specifications							Optional Factory Installed VFD Electrical Specifications		
HP	Volts	HZ	Phase	FLA per motor	Min. Cir. Amps	Max. Overcurrent Protection Device	FLA per motor	Min. Cir. Amps	Max. Overcurrent Protection Device
1.5	120	60	Single	15.2	34.2	45			
1.5	208-230	60	Single	8.2-7.6	18.5	25	4.6-4.8	20.6	25
	208-230	60	Three	4.6-4.8	10.8	15	4.6-4.8	11.9	15
	460	60	Three	2.4	5.4	15	2.4	5.9	15
	575	60	Three	1.8	4.1	15	1.8	4.5	15
2.0	120	60	Single	20.0	45.0	60			
2.0	208-230	60	Single	10.8-10.0	24.3	35	6.6-5.8	28.3	30
	208-230	60	Three	6.6-5.8	14.9	20	6.6-5.8	16.3	20
	460	60	Three	2.9	6.5	15	2.9	7.2	15
	575	60	Three	2.4	5.4	15	2.4	5.9	15

Specifications may be subject to change without notice.

RenewAire Energy Recovery Ventilation

HE2XINH Energy Recovery Ventilator Standard

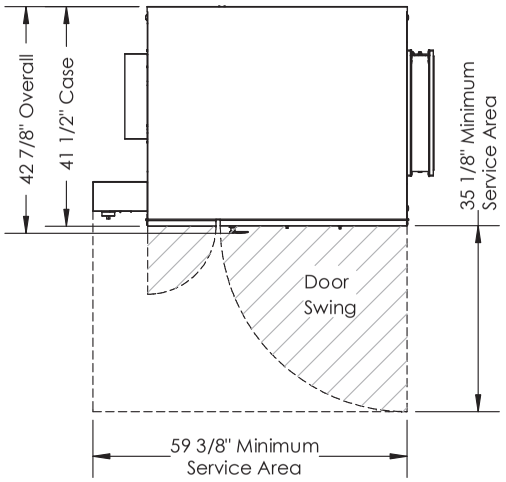

TOP VIEW

ABBREVIATIONS
EA: Exhaust Air to outside
OA: Outside Air intake
RA: Room Air to be exhausted
FA: Fresh Air to inside

INSTALLATION ORIENTATION
Unit must be installed in orientation shown.

NOTE
1. UNLESS OTHERWISE SPECIFIED, DIMENSIONS ARE ROUNDED TO THE NEAREST EIGHTH OF AN INCH.

2. SPECIFICATIONS MAY BE SUBJECT TO CHANGE WITHOUT NOTICE.

3. MIN. DUCT CLEARANCE FROM DAMPER BLADES WHEN FULLY OPENED TO BE 2". SMACNA RULES APPLY.

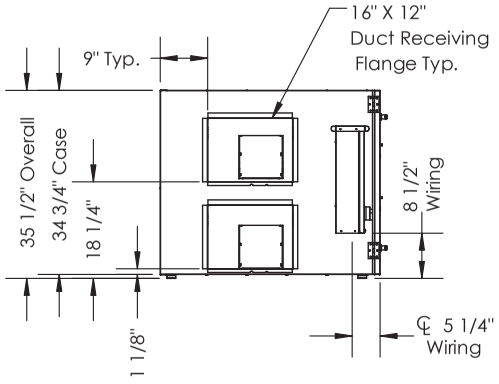

LEFT VIEW

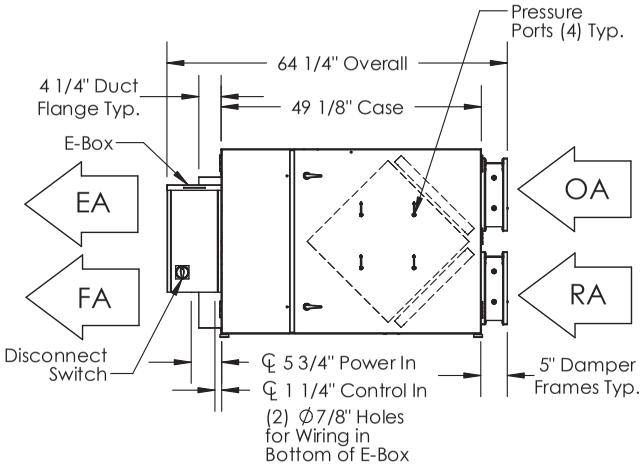

FRONT VIEW

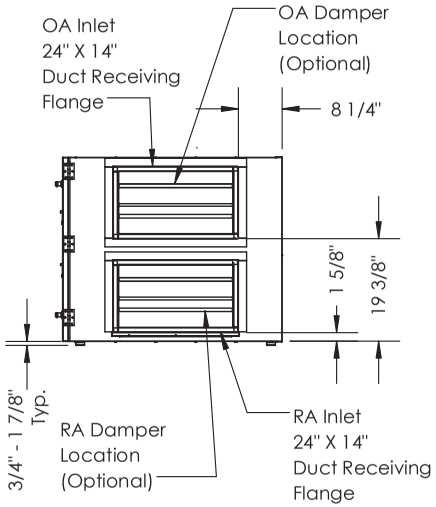

RIGHT VIEW

AIRFLOW CONFIGURATION
Available as shown in dimension drawing.

UNIT MOUNTING & APPLICATION
Must be mounted as shown. RA/EA airstream can be switched with OA/FA airstream unless certain options are selected.

HE 2XINH

Energy Recovery Ventilator
Standard with Bypass Economizer

AHRI CERTIFIED® www.ahridirectory.org
Globally Recognized. Industry Respected.

c UL us LISTED DUCTED HEAT RECOVERY VENTILATOR 89S5

INDOOR UNIT

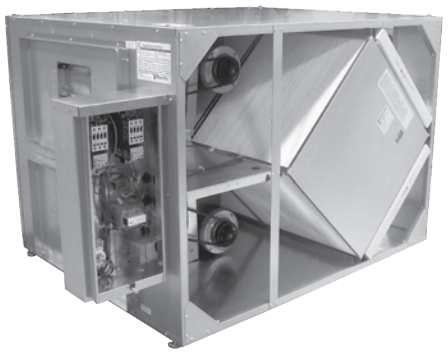

Download specification at:
renewaire.com/specifications

SPECIFICATIONS

Ventilation Type:
Static plate, heat and humidity transfer

Typical Airflow Range: 500-2,200 CFM

AHRI 1060 Certified Core: Two L125-G5

Standard Features:
TEFC Premium efficiency motors
Motor starters
Non-fused disconnect
24 VAC transformer/relay package
Cross-core differential pressure ports

Filters:
Total qty. 4, MERV 8: 20" x 20" x 2"

Unit Dimensions & Weight:
64 1/2" L x 43" W x 35 1/2" H
406-619 lbs., varies by option(s)

Max. Shipping Dimensions & Weight (on pallet):
70" L x 47" W x 40" H
714 lbs.

Motor(s):
Qty. 2, Belt drive blower/standard motor packages with adjustable sheaves (see table below)

Options:
Onboard variable frequency drives (VFDs) - one or both airstreams
Shaft grounding ring on motors with VFDs
Fused disconnect
Integrated programmable controls - enhanced, premium
Bypass economizer damper (see bypass DIM drawing) - dry-bulb temperature controls (standard), enthalpy controls (option)
Class 1 low leakage motorized isolation dampers - OA, RA or both airstreams
Qty. 2, Factory mounted filter alarms - both airstreams
Double wall construction
Exterior paint - white, custom colors

Accessories:
Filters - MERV 13, 2" (shipped loose)
Digital time clock - wall mount (TC7D-W), in exterior enclosure (TC7D-E)
Carbon dioxide sensor/control - wall mount (CO2-W), duct mount (CO2-D)
IAQ sensor - wall mount (IAQ-W), duct mount (IAQ-D)
Motion occupancy sensor/control - ceiling mount (MC-C), wall mount (MC-W)
Smoke Detector - duct mount (SD-D)
Electric duct heater - EK series (1–175 kW)
Indirect gas-fired duct furnace - GH series (50-400 MBH), installed downstream of any fans

AIRFLOW PERFORMANCE

Motor HP	Blower RPM	Sheave Adj. Turns Open	External Static Pressure (in. w.g.)													
			0.00		0.25		0.50		0.75		1.00		1.25		1.50	
			SCFM	BHP	SCFM	BHP	SCFM	BHP	SCFM	BHP	SCFM	BHP	SCFM	BHP	SCFM	BHP
1.5	1148	4	1592	0.7	1480	0.7	1320	0.6	1120	0.5	800	0.4				
	1304	2	1809	1.0	1720	1.0	1600	0.9	1410	0.8	1250	0.7	975	0.6	630	0.4
	1460	0	2025	1.5	1950	1.4	1845	1.3	1715	1.2	1540	1.1	1400	1.0	1165	0.8
2.0	1506	2	2130	1.6	2050	1.5	1955	1.4	1840	1.3	1735	1.2	1585	1.0	1360	0.9
	1584	1			2170	1.8	2080	1.7	1970	1.5	1870	1.4	1765	1.3	1565	1.1
	1661	0					2200	1.9	2100	1.8	2000	1.7	1900	1.5	1765	1.4

Note: Brake Horse Power (BHP) is for one blower motor package only. **Operation in this zone will likely exceed FLA limits.** **Operation in this zone outside of core airflow limits.**

Note: Airflow performance includes effect of clean, standard filter supplied with unit.

ELECTRICAL DATA

Standard Electrical Specifications							Optional Factory Installed VFD Electrical Specifications		
HP	Volts	HZ	Phase	FLA per motor	Min. Cir. Amps	Max. Overcurrent Protection Device	FLA per motor	Min. Cir. Amps	Max. Overcurrent Protection Device
1.5	120	60	Single	15.2	34.2	45			
1.5	208-230	60	Single	8.2-7.6	18.5	25	4.6-4.8	20.6	25
	208-230	60	Three	4.6-4.8	10.8	15	4.6-4.8	11.9	15
	460	60	Three	2.4	5.4	15	2.4	5.9	15
	575	60	Three	1.8	4.1	15	1.8	4.5	15
2.0	120	60	Single	20.0	45.0	60			
2.0	208-230	60	Single	10.8-10.0	24.3	35	6.6-5.8	28.3	30
	208-230	60	Three	6.6-5.8	14.9	20	6.6-5.8	16.3	20
	460	60	Three	2.9	6.5	15	2.9	7.2	15
	575	60	Three	2.4	5.4	15	2.4	5.9	15

Specifications may be subject to change without notice.

RenewAire Energy Recovery Ventilation

HE2XINH Energy Recovery Ventilator Standard with Bypass Economizer

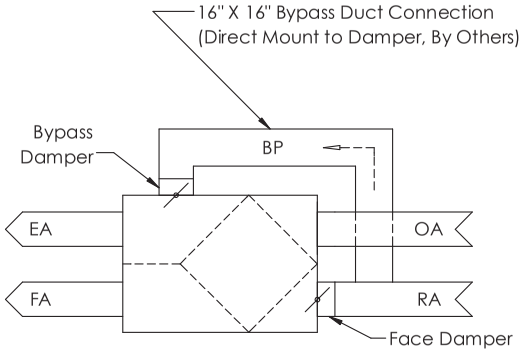

BYPASS AIRFLOW SCHEMATIC
FRONT VIEW

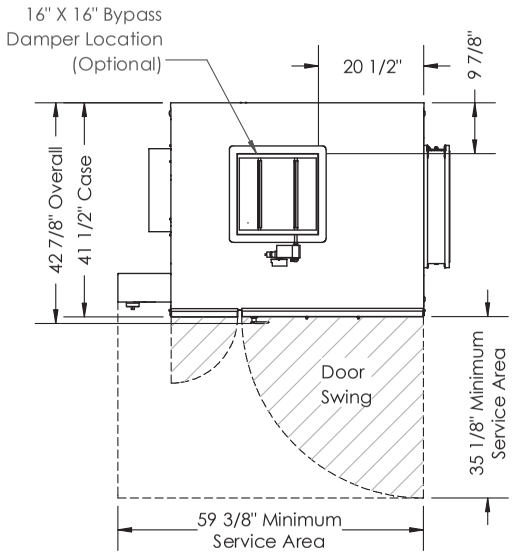

TOP VIEW

ABBREVIATIONS
EA: Exhaust Air to outside
OA: Outside Air intake
RA: Room Air to be exhausted
FA: Fresh Air to inside
BP: Bypass Air Intake

INSTALLATION ORIENTATION
Unit must be installed in orientation shown.

NOTE
1. UNLESS OTHERWISE SPECIFIED, DIMENSIONS ARE ROUNDED TO THE NEAREST EIGHTH OF AN INCH.

2. SPECIFICATIONS MAY BE SUBJECT TO CHANGE WITHOUT NOTICE.

3. MIN. DUCT CLEARANCE FROM DAMPER BLADES WHEN FULLY OPENED TO BE 2". SMACNA RULES APPLY.

4. UNITS WITH BYPASS WILL REQUIRE ADDITIONAL SPACE FOR THE CONNECTION OF THE BYPASS DUCT (BY OTHERS).

5. FOR INSTALLATION DETAILS, REFER TO I&O MANUAL SUPPLEMENT FOR BYPASS.

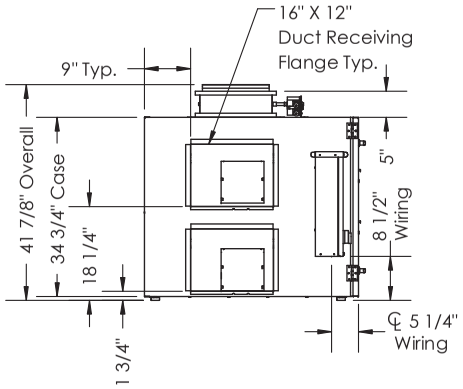

LEFT VIEW

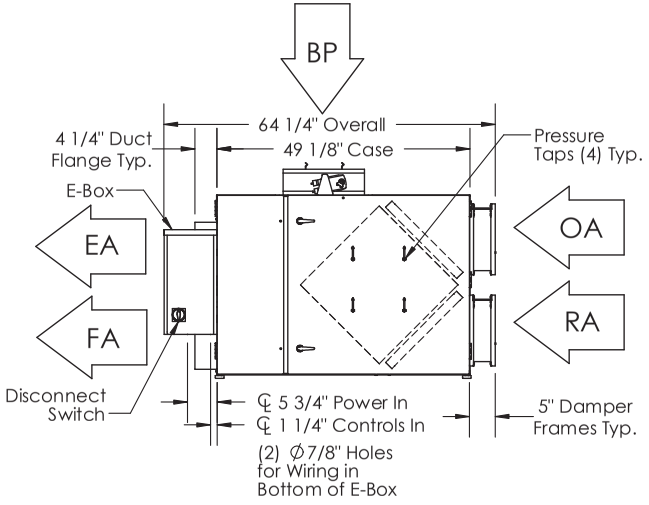

FRONT VIEW

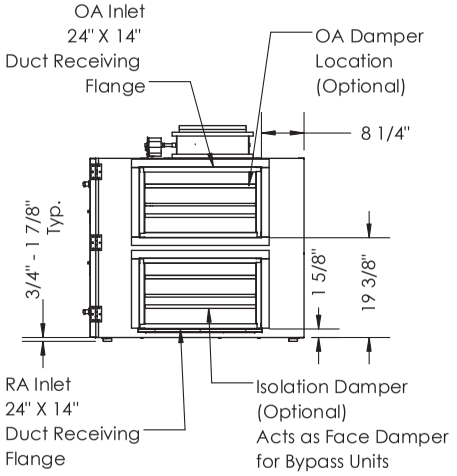

RIGHT VIEW

AIRFLOW CONFIGURATION
Available as shown in dimension drawing.

UNIT MOUNTING & APPLICATION
Must be mounted as shown. Airstreams can not be switched.

HE 2XINV

Energy Recovery Ventilator
Standard

AHRI CERTIFIED www.ahridirectory.org
Globally Recognized. Industry Respected.

c UL us LISTED DUCTED HEAT RECOVERY VENTILATOR 89S5

INDOOR UNIT

Download specification at:
renewaire.com/specifications

SPECIFICATIONS

Ventilation Type:
Static plate, heat and humidity transfer

Typical Airflow Range: 500-2,200 CFM

AHRI 1060 Certified Core: Two L125-G5

Standard Features:
TEFC Premium efficiency motors
Motor starters
Non-fused disconnect
24 VAC transformer/relay package
Cross-core differential pressure ports

Filters:
Total qty. 4, MERV 8: 20" x 20" x 2"

Unit Dimensions & Weight:
50 1/2" L x 42" W x 52 1/2" H
363-583 lbs., varies by option(s)

Max. Shipping Dimensions & Weight (on pallet):
70" L x 47" W x 57" H
678 lbs.

Motor(s):
Qty. 2, Belt drive blower/standard motor packages with adjustable sheaves (see table below)

Options:
Onboard variable frequency drives (VFDs) - one or both airstreams
Shaft grounding ring on motors with VFDs
Fused disconnect
Integrated programmable controls - enhanced, premium
Bypass economizer damper (see bypass DIM drawing) - dry-bulb temperature controls (standard), enthalpy controls (option)
Class 1 low leakage motorized isolation dampers - OA, RA or both airstreams
Qty. 2, Factory mounted filter alarms - both airstreams
Double wall construction
Exterior paint - white, custom colors

Accessories:
Filters - MERV 13, 2" (shipped loose)
Digital time clock - wall mount (TC7D-W), in exterior enclosure (TC7D-E)
Carbon dioxide sensor/control - wall mount (CO2-W), duct mount (CO2-D)
IAQ sensor - wall mount (IAQ-W), duct mount (IAQ-D)
Motion occupancy sensor/control - ceiling mount (MC-C), wall mount (MC-W)
Smoke Detector - duct mount (SD-D)
Electric duct heater - EK series (1–175 kW)
Indirect gas-fired duct furnace - GH series (50-400 MBH), installed downstream of any fans

AIRFLOW PERFORMANCE

Motor HP	Blower RPM	Sheave Adj. Turns Open	External Static Pressure (in. w.g.)													
			0.00		0.25		0.50		0.75		1.00		1.25		1.50	
			SCFM	BHP	SCFM	BHP	SCFM	BHP	SCFM	BHP	SCFM	BHP	SCFM	BHP	SCFM	BHP
1.5	1146	4	1735	0.8	1670	0.7	1520	0.7	1205	0.5	900	0.4				
	1302	2	1975	1.1	1925	1.1	1835	1.0	1615	0.9	1340	0.8	1080	0.6	670	0.4
	1458	0					2100	1.5	1970	1.4	1755	1.3	1495	1.1	1280	0.9
2.0	1503	2					2175	1.7	2100	1.6	1945	1.4	1700	1.2	1465	1.0
	1581	1									2120	1.7	1920	1.5	1685	1.2
	1658	0											2125	1.9	1900	1.6

Note: Brake Horse Power (BHP) is for one blower motor package only. **Operation in this zone will likely exceed FLA limits.** **Operation in this zone outside of core airflow limits.**

Note: Airflow performance includes effect of clean, standard filter supplied with unit.

ELECTRICAL DATA

Standard Electrical Specifications							Optional Factory Installed VFD Electrical Specifications		
HP	Volts	HZ	Phase	FLA per motor	Min. Cir. Amps	Max. Overcurrent Protection Device	FLA per motor	Min. Cir. Amps	Max. Overcurrent Protection Device
1.5	120	60	Single	15.2	34.2	45			
1.5	208-230	60	Single	8.2-7.6	18.5	25	4.6-4.8	20.6	25
	208-230	60	Three	4.6-4.8	10.8	15	4.6-4.8	11.9	15
	460	60	Three	2.4	5.4	15	2.4	5.9	15
	575	60	Three	1.8	4.1	15	1.8	4.5	15
2.0	120	60	Single	20.0	45.0	60			
2.0	208-230	60	Single	10.8-10.0	24.3	35	6.6-5.8	28.3	30
	208-230	60	Three	6.6-5.8	14.9	20	6.6-5.8	16.3	20
	460	60	Three	2.9	6.5	15	2.9	7.2	15
	575	60	Three	2.4	5.4	15	2.4	5.9	15

Specifications may be subject to change without notice.

RenewAire Energy Recovery Ventilation

HE2XINV Energy Recovery Ventilator Standard

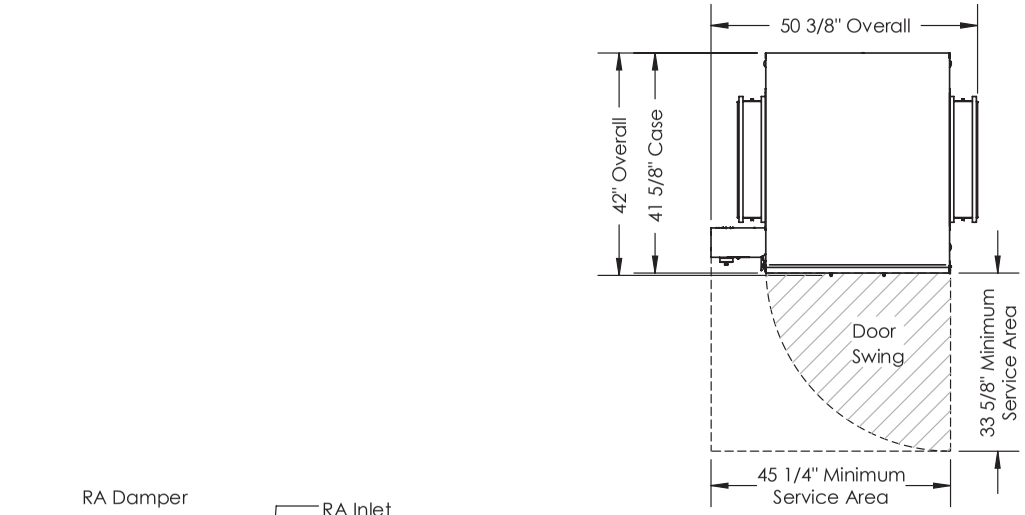

TOP VIEW

ABBREVIATIONS
EA: Exhaust Air to outside
OA: Outside Air intake
RA: Room Air to be exhausted
FA: Fresh Air to inside

INSTALLATION ORIENTATION
Unit must be installed in orientation shown.

NOTE
1. UNLESS OTHERWISE SPECIFIED, DIMENSIONS ARE ROUNDED TO THE NEAREST EIGHTH OF AN INCH.

2. SPECIFICATIONS MAY BE SUBJECT TO CHANGE WITHOUT NOTICE.

3. MIN. DUCT CLEARANCE FROM DAMPER BLADES WHEN FULLY OPENED TO BE 2". SMACNA RULES APPLY.

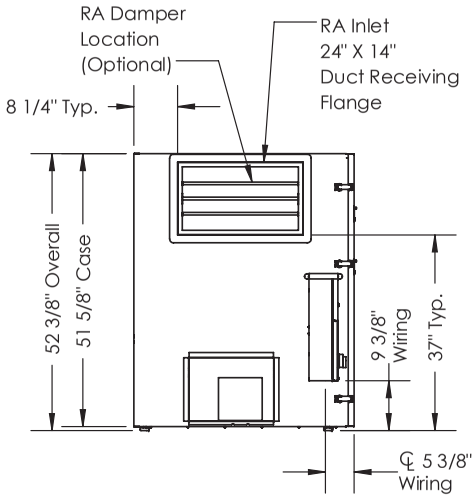

LEFT VIEW

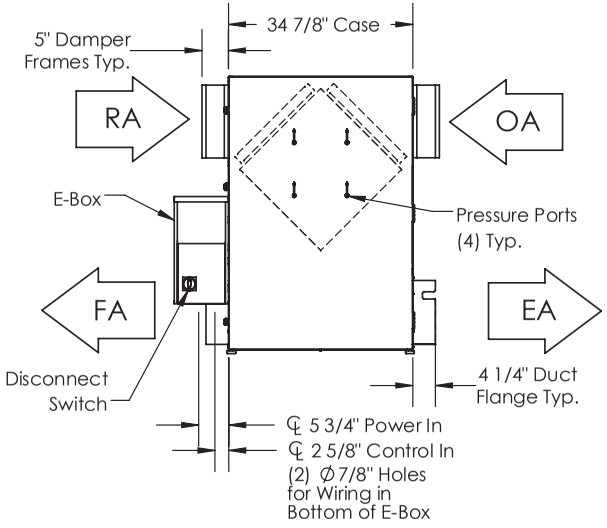

FRONT VIEW

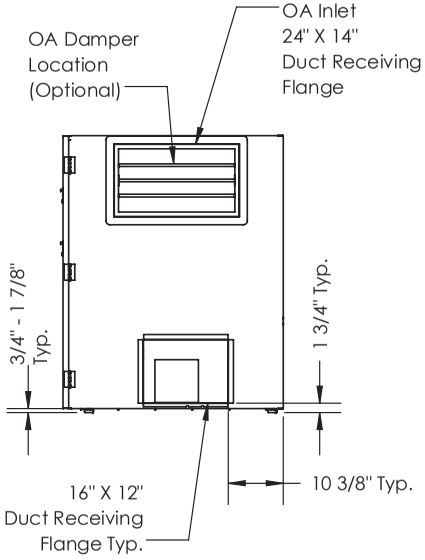

RIGHT VIEW

AIRFLOW CONFIGURATION
Available as shown in dimension drawing.

UNIT MOUNTING & APPLICATION
Must be mounted as shown. RA/EA airstream can be switched with OA/FA airstream unless certain options are selected.

HE 2XINV

Energy Recovery Ventilator
Standard with Bypass Economizer

AHRI CERTIFIED® www.ahridirectory.org
Globally Recognized. Industry Respected.

c UL us LISTED DUCTED HEAT RECOVERY VENTILATOR 89S5

INDOOR UNIT

Download specification at:
renewaire.com/specifications

SPECIFICATIONS

Ventilation Type:
Static plate, heat and humidity transfer

Typical Airflow Range: 500-2,200 CFM

AHRI 1060 Certified Core: Two L125-G5

Standard Features:
TEFC Premium efficiency motors
Motor starters
Non-fused disconnect
24 VAC transformer/relay package
Cross-core differential pressure ports

Filters:
Total qty. 4, MERV 8: 20" x 20" x 2"

Unit Dimensions & Weight:
50 1/2" L x 42" W x 52 1/2" H
363-583 lbs., varies by option(s)

Max. Shipping Dimensions & Weight (on pallet):
70" L x 47" W x 57" H
678 lbs.

Motor(s):
Qty. 2, Belt drive blower/standard motor packages with adjustable sheaves (see table below)

Options:
Onboard variable frequency drives (VFDs) - one or both airstreams
Shaft grounding ring on motors with VFDs
Fused disconnect
Integrated programmable controls - enhanced, premium
Bypass economizer damper (see bypass DIM drawing) - dry-bulb temperature controls (standard), enthalpy controls (option)
Class 1 low leakage motorized isolation dampers - OA, RA or both airstreams
Qty. 2, Factory mounted filter alarms - both airstreams
Double wall construction
Exterior paint - white, custom colors

Accessories:
Filters - MERV 13, 2" (shipped loose)
Digital time clock - wall mount (TC7D-W), in exterior enclosure (TC7D-E)
Carbon dioxide sensor/control - wall mount (CO2-W), duct mount (CO2-D)
IAQ sensor - wall mount (IAQ-W), duct mount (IAQ-D)
Motion occupancy sensor/control - ceiling mount (MC-C), wall mount (MC-W)
Smoke Detector - duct mount (SD-D)
Electric duct heater - EK series (1–175 kW)
Indirect gas-fired duct furnace - GH series (50-400 MBH), installed downstream of any fans

AIRFLOW PERFORMANCE

Motor HP	Blower RPM	Sheave Adj. Turns Open	External Static Pressure (in. w.g.)													
			0.00		0.25		0.50		0.75		1.00		1.25		1.50	
			SCFM	BHP	SCFM	BHP	SCFM	BHP	SCFM	BHP	SCFM	BHP	SCFM	BHP	SCFM	BHP
1.5	1146	4	1735	0.8	1670	0.7	1520	0.7	1205	0.5	900	0.4				
	1302	2	1975	1.1	1925	1.1	1835	1.0	1615	0.9	1340	0.8	1080	0.6	670	0.4
	1458	0					2100	1.5	1970	1.4	1755	1.3	1495	1.1	1280	0.9
2.0	1503	2					2175	1.7	2100	1.6	1945	1.4	1700	1.2	1465	1.0
	1581	1									2120	1.7	1920	1.5	1685	1.2
	1658	0											2125	1.9	1900	1.6

Note: Brake Horse Power (BHP) is for one blower motor package only. **Operation in this zone will likely exceed FLA limits.** **Operation in this zone outside of core airflow limits.**

Note: Airflow performance includes effect of clean, standard filter supplied with unit.

ELECTRICAL DATA

Standard Electrical Specifications							Optional Factory Installed VFD Electrical Specifications		
HP	Volts	HZ	Phase	FLA per motor	Min. Cir. Amps	Max. Overcurrent Protection Device	FLA per motor	Min. Cir. Amps	Max. Overcurrent Protection Device
1.5	120	60	Single	15.2	34.2	45			
1.5	208-230	60	Single	8.2-7.6	18.5	25	4.6-4.8	20.6	25
	208-230	60	Three	4.6-4.8	10.8	15	4.6-4.8	11.9	15
	460	60	Three	2.4	5.4	15	2.4	5.9	15
	575	60	Three	1.8	4.1	15	1.8	4.5	15
2.0	120	60	Single	20.0	45.0	60			
2.0	208-230	60	Single	10.8-10.0	24.3	35	6.6-5.8	28.3	30
	208-230	60	Three	6.6-5.8	14.9	20	6.6-5.8	16.3	20
	460	60	Three	2.9	6.5	15	2.9	7.2	15
	575	60	Three	2.4	5.4	15	2.4	5.9	15

Specifications may be subject to change without notice.

RenewAire® Energy Recovery Ventilation

HE2XINV Energy Recovery Ventilator Standard with Bypass Economizer

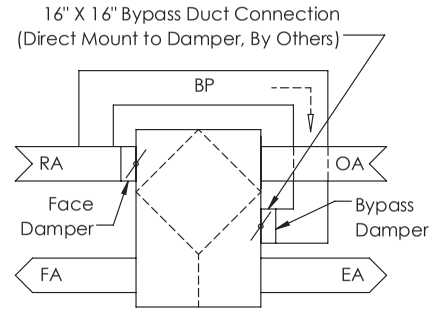

BYPASS AIRFLOW SCHEMATIC
FRONT VIEW

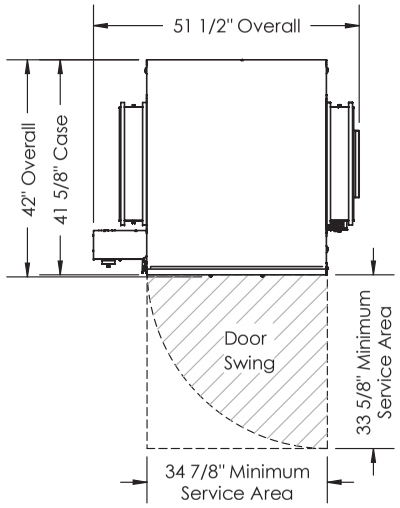

TOP VIEW

ABBREVIATIONS
EA: Exhaust Air to outside
OA: Outside Air intake
RA: Room Air to be exhausted
FA: Fresh Air to inside
BP: Bypass Air Intake

INSTALLATION ORIENTATION
Unit must be installed in orientation shown.

NOTE
1. UNLESS OTHERWISE SPECIFIED, DIMENSIONS ARE ROUNDED TO THE NEAREST EIGHTH OF AN INCH.

2. SPECIFICATIONS MAY BE SUBJECT TO CHANGE WITHOUT NOTICE.

3. MIN. DUCT CLEARANCE FROM DAMPER BLADE WHEN FULLY OPENED TO BE 2". SMACNA RULES APPLY.

4. UNITS WITH BYPASS WILL REQUIRE ADDITIONAL SPACE FOR THE CONNECTION OF THE BYPASS DUCT (BY OTHERS).

5. FOR INSTALLATION DETAILS, REFER TO I&O MANUAL SUPPLEMENT FOR BYPASS.

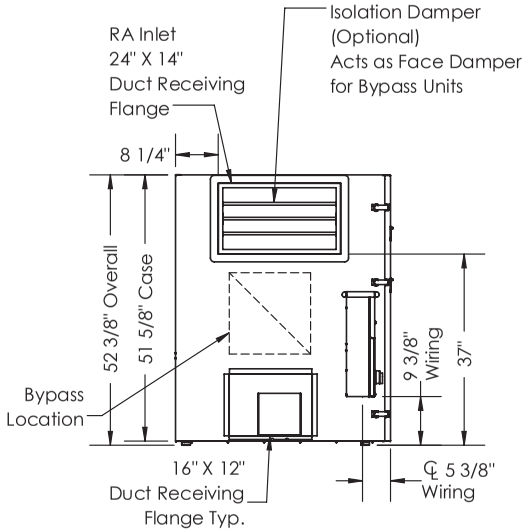

LEFT VIEW

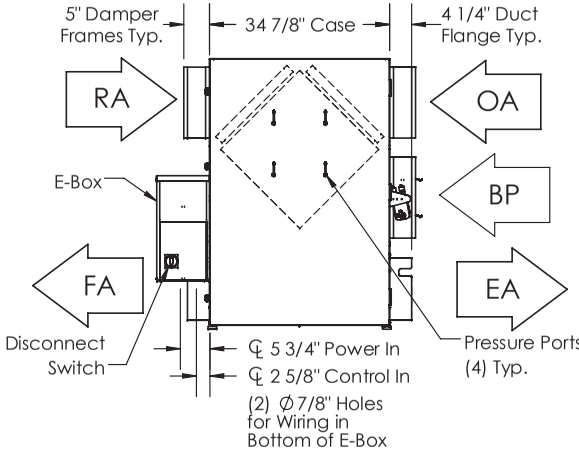

FRONT VIEW

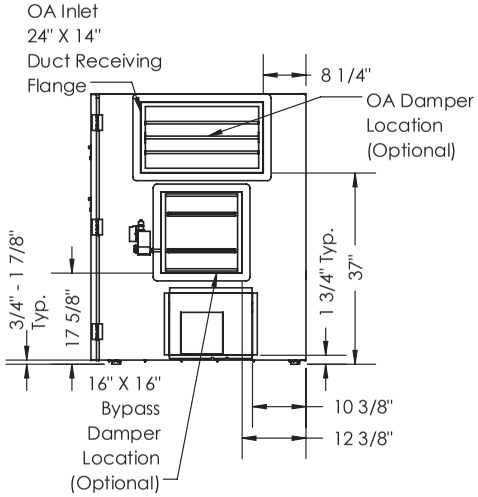

RIGHT VIEW

AIRFLOW CONFIGURATION
Available as shown in dimension drawing.

UNIT MOUNTING & APPLICATION
Must be mounted as shown. Airstreams can not be switched.

HE 2XRT

Energy Recovery Ventilator
Standard

AHRI CERTIFIED www.ahridirectory.org
Globally Recognized. Industry Respected.

c UL us LISTED DUCTED HEAT RECOVERY VENTILATOR 89S5

ROOFTOP UNIT

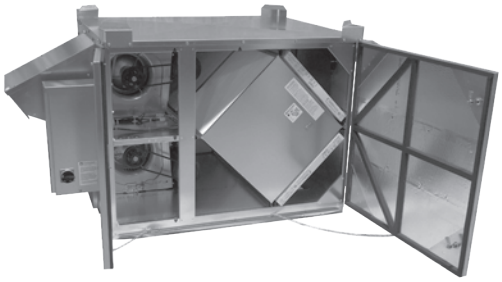

Download specification at:
renewaire.com/specifications

SPECIFICATIONS

Ventilation Type:
Static plate, heat and humidity transfer

Typical Airflow Range: 500-2,000 CFM

AHRI 1060 Certified Core: Two L125-G5

Standard Features:
TEFC Premium efficiency motors
Motor starters
Non-fused disconnect
24 VAC transformer/relay package
Cross-core differential pressure ports

Filters:
Total qty. 4, MERV 8: 20" x 20" x 2"

Unit Dimensions & Weight:
87 1/2" L x 43 1/4" W x 44" H
498-689 lbs., varies by option(s)

Max. Shipping Dimensions & Weight (on pallet):
96" L x 47" W x 50" H
784 lbs.

Motor(s):
Qty. 2, Belt drive blower/standard motor packages with adjustable sheaves (see table below)

Options:
Onboard variable frequency drives (VFDs) - one or both airstreams
Shaft grounding ring on motors with VFDs
Fused disconnect
Integrated programmable controls - enhanced, premium
Class 1 low leakage motorized isolation dampers - OA, RA or both airstreams
Qty. 2, Factory mounted filter alarms - both airstreams
Double wall construction
Exterior paint - white, custom colors

Accessories:
Filters - MERV 13, 2" (shipped loose)
Roof curb - standard 14"
Curb wind clip
Engineered combo curb for Carrier RTU
Engineered combo curb for Trane RTU
Digital time clock - wall mount (TC7D-W), in exterior enclosure (TC7D-E)
Carbon dioxide sensor/control - wall mount (CO2-W), duct mount (CO2-D)
IAQ sensor - wall mount (IAQ-W), duct mount (IAQ-D)
Motion occupancy sensor/control - ceiling mount (MC-C), wall mount (MC-W)
Smoke Detector - duct mount (SD-D)
Electric duct heater - EK series (1–175 kW); designed for indoor ductwork installation only
Indirect gas-fired duct furnace - GH series (50-400 MBH), installed downstream of any fans

AIRFLOW PERFORMANCE

Motor HP	Blower RPM	Sheave Adj. Turns Open	External Static Pressure (in. w.g.)													
			0.00		0.25		0.50		0.75		1.00		1.25		1.50	
			SCFM	BHP	SCFM	BHP	SCFM	BHP	SCFM	BHP	SCFM	BHP	SCFM	BHP	SCFM	BHP
1.5	1192	4	1560	0.7	1460	0.7	1300	0.6	1100	0.5	845	0.4				
	1348	2	1765	1.1	1685	1.0	1560	0.9	1380	0.8	1210	0.7	975	0.6	650	0.4
	1504	0	1970	1.5	1900	1.4	1800	1.3	1670	1.2	1500	1.1	1345	1.0	1135	0.8
2.0	1516	2	2087	1.6	2000	1.5	1915	1.4	1775	1.2	1635	1.1	1475	1.0	1260	0.8
	1594	1	2194	1.8	2110	1.7	2035	1.6	1920	1.5	1765	1.3	1630	1.2	1470	1.1
	1671	0					2145	1.9	2050	1.7	1905	1.5	1775	1.4	1640	1.3

Note: Brake Horse Power (BHP) is for one blower motor package only. **Operation in this zone will likely exceed FLA limits.** **Operation in this zone outside of core airflow limits.**

Note: Airflow performance includes effect of clean, standard filter supplied with unit.

ELECTRICAL DATA

Standard Electrical Specifications							Optional Factory Installed VFD Electrical Specifications		
HP	Volts	HZ	Phase	FLA per motor	Min. Cir. Amps	Max. Overcurrent Protection Device	FLA per motor	Min. Cir. Amps	Max. Overcurrent Protection Device
1.5	120	60	Single	15.2	34.2	45			
1.5	208-230	60	Single	8.2-7.6	18.5	25	4.6-4.8	20.6	25
	208-230	60	Three	4.6-4.8	10.8	15	4.6-4.8	11.9	15
	460	60	Three	2.4	5.4	15	2.4	5.9	15
	575	60	Three	1.8	4.1	15	1.8	4.5	15
2.0	120	60	Single	20.0	45.0	60			
2.0	208-230	60	Single	10.8-10.0	24.3	35	6.6-5.8	28.3	30
	208-230	60	Three	6.6-5.8	14.9	20	6.6-5.8	16.3	20
	460	60	Three	2.9	6.5	15	2.9	7.2	15
	575	60	Three	2.4	5.4	15	2.4	5.9	15

Specifications may be subject to change without notice.

RenewAire Energy Recovery Ventilation

HE2XRT (RTV/RTR) Energy Recovery Ventilator Standard

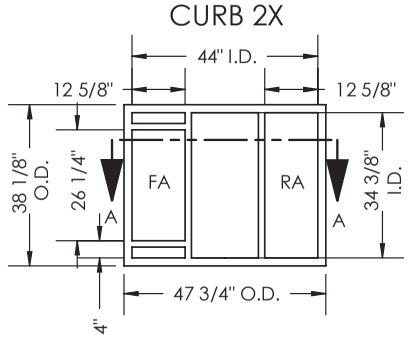

TOP VIEW

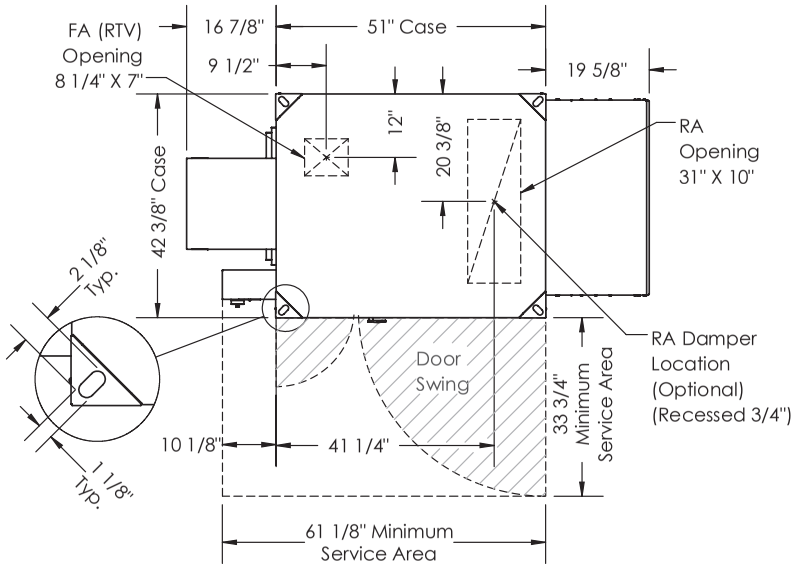

TOP VIEW

ABBREVIATIONS
EA: Exhaust Air to outside
OA: Outside Air intake
RA: Room Air to be exhausted
FA: Fresh Air to inside
RTV: Rooftop Vertical RA & FA
RTR: Rooftop Vertical RA Only

INSTALLATION ORIENTATION
Unit must be installed in orientation shown.

NOTE:
1. UNLESS OTHERWISE SPECIFIED, DIMENSIONS ARE ROUNDED TO THE NEAREST EIGHTH OF AN INCH.

2. SPECIFICATIONS MAY BE SUBJECT TO CHANGE WITHOUT NOTICE.

CURB CROSS-SECTION A-A (TYP.)

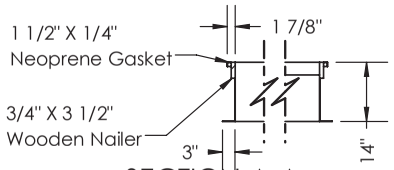

SECTION A-A

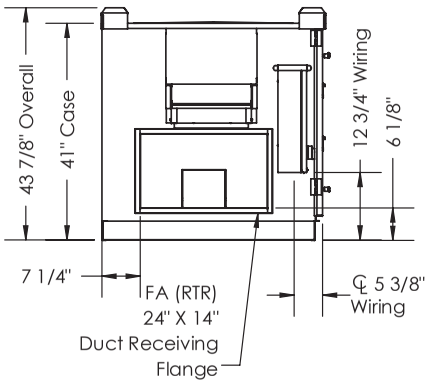

LEFT VIEW

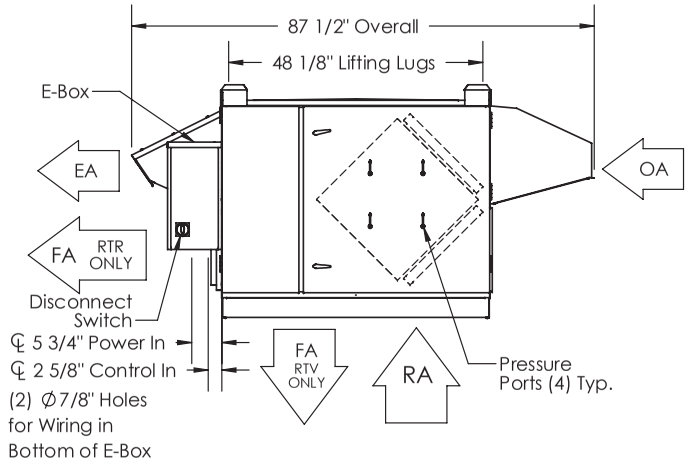

FRONT VIEW

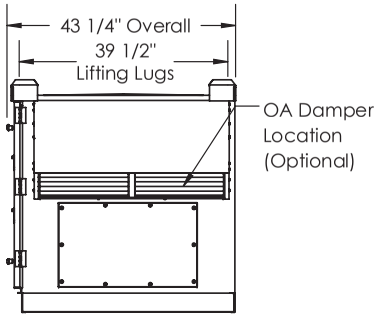

RIGHT VIEW

AIRFLOW CONFIGURATION
Available as shown:

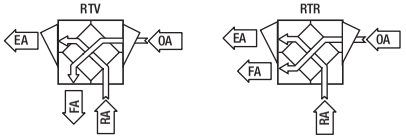

UNIT MOUNTING & APPLICATION
Must be mounted as shown. Airstreams can not be switched.

HE2XRT (RTH/RTF) Energy Recovery Ventilator Standard

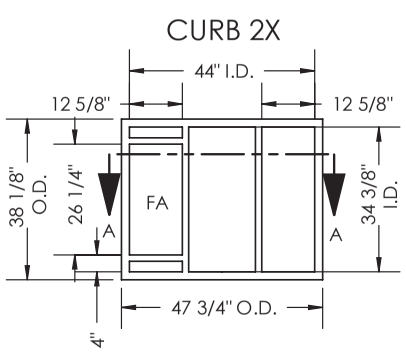

TOP VIEW

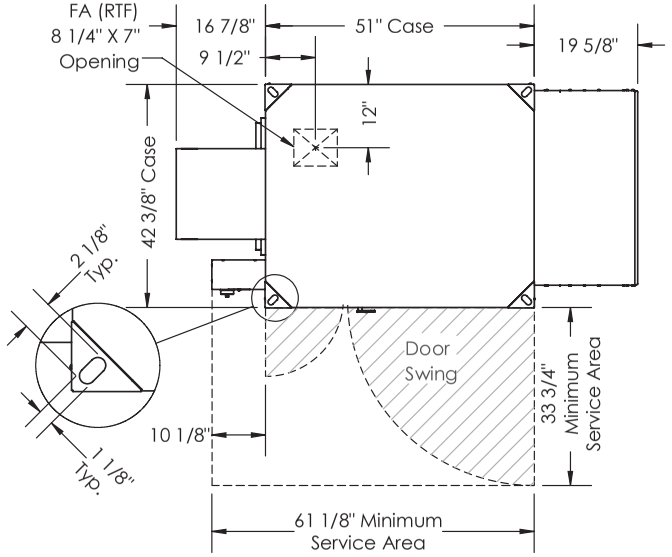

TOP VIEW

ABBREVIATIONS
EA: Exhaust Air to outside
OA: Outside Air intake
RA: Room Air to be exhausted
FA: Fresh Air to inside
RTF: Rooftop Vertical FA Only
RTH: Rooftop Horizontal RA & FA

INSTALLATION ORIENTATION
Unit must be installed in orientation shown.

NOTE:
1. UNLESS OTHERWISE SPECIFIED, DIMENSIONS ARE ROUNDED TO THE NEAREST EIGHTH OF AN INCH.

2. SPECIFICATIONS MAY BE SUBJECT TO CHANGE WITHOUT NOTICE.

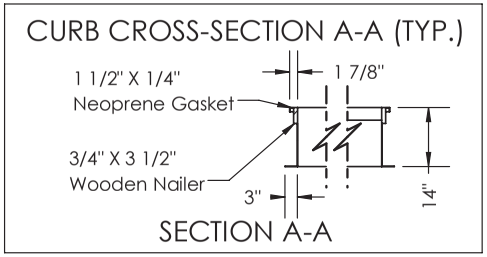

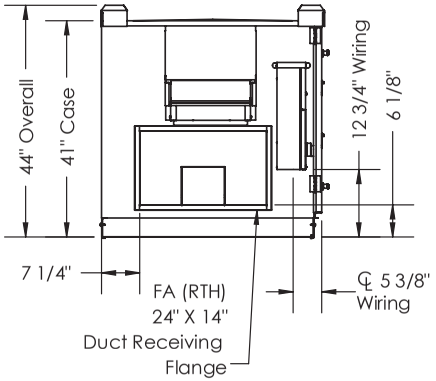

LEFT VIEW

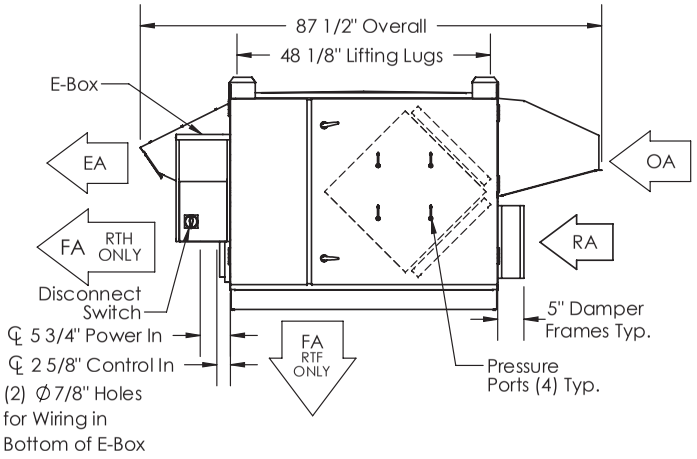

FRONT VIEW

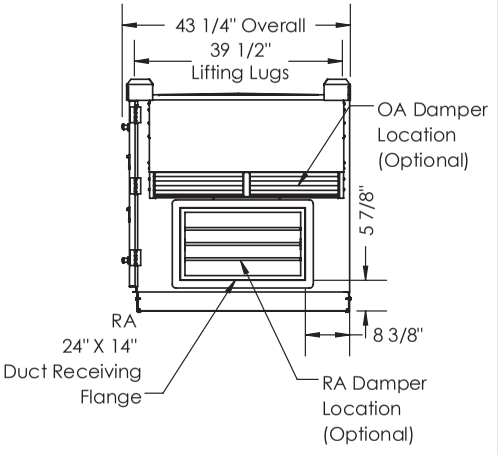

RIGHT VIEW

AIRFLOW CONFIGURATION

Available as shown:

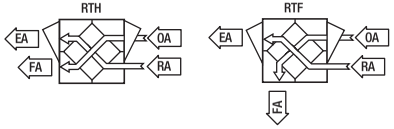

UNIT MOUNTING & APPLICATION

Must be mounted as shown. Airstreams can not be switched.

RenewAire Energy Recovery Ventilation

THIS PAGE IS INTENTIONALLY LEFT BLANK.

HE 2XRTC

Energy Recovery Ventilator
Standard

AHRI CERTIFIED® www.ahridirectory.org
Globally Recognized. Industry Respected.

c UL us LISTED DUCTED HEAT RECOVERY VENTILATOR 89S5

ROOFTOP UNIT
Direct Connect

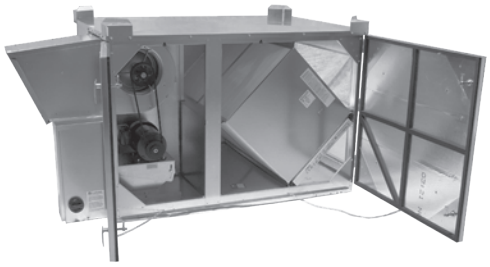

Download specification at:
renewaire.com/specifications

SPECIFICATIONS

Ventilation Type:
Static plate, heat and humidity transfer

Typical Airflow Range: 500-1,700 CFM

AHRI 1060 Certified Core: Two L125-G5

Standard Features:
TEFC Premium efficiency motors
Motor starters
Non-fused disconnect
24 VAC transformer/relay package
Cross-core differential pressure ports

Filters:
Total qty. 4, MERV 8: (2) 20" x 20" x 2" and (2) 14" x 20" x 2"

Unit Dimensions & Weight:
77 1/4" L x 61" W x 50" H
566-711 lbs., varies by option(s)

Max. Shipping Dimensions & Weight (on pallet):
80" L x 90" W x 50" H
850 lbs.

Motor(s):
Qty. 2, 2.0 HP ea., Belt drive blower/standard motor packages with adjustable sheaves (see table below)

Options:
Onboard variable frequency drives (VFDs) - one or both airstreams
Shaft grounding ring on motors with VFDs
Fused disconnect
Integrated programmable controls - enhanced, premium
Qty. 2, Factory mounted filter alarms - both airstreams
Double wall construction
Exterior paint - white, custom colors

Accessories:
Filters - MERV 13, 2" (shipped loose)
RTC transition kit - for vertical RTU, for horizontal RTU
Rooftop RTC transition paint - white, custom colors
Digital time clock - wall mount (TC7D-W), in exterior enclosure (TC7D-E)
Carbon dioxide sensor/control - wall mount (CO2-W), duct mount (CO2-D)
IAQ sensor - wall mount (IAQ-W), duct mount (IAQ-D)
Motion occupancy sensor/control - ceiling mount (MC-C), wall mount (MC-W)
Smoke Detector - duct mount (SD-D)

Note: Electric Duct Heater and Indirect Gas-Fired Duct Furnace are not available on RTC units.

AIRFLOW PERFORMANCE

	Blower RPM Nominal	Sheave Adj. Turns Open	Tie-In Directly to Rooftop A/C Unit*						Unit Ducted Independently*							
			Static Pressure in Adjacent Air Handler (Inches Water Column)						External Static Pressure (Inches Water Column)							
			-0.75		-0.5		-0.25		0.0		+0.25		+0.5		+0.75	
			CFM	BHP	CFM	BHP	CFM	BHP	CFM	BHP	CFM	BHP	CFM	BHP	CFM	BHP
Exhaust Air	1450	0	1664	1.6	1785	1.9							1785	1.9	1664	1.6
	1370	1	1400	1.4	1570	1.6	1740	1.8	1900	1.9	1740	1.8	1570	1.6	1400	1.4
	1290	2	1125	1.3	1350	1.4	1575	1.5	1727	1.6	1575	1.5	1350	1.4	1125	1.3
	1210	3	945	1.0	1165	1.1	1385	1.3	1560	1.4	1385	1.3	1165	1.1	945	1.0
	1130	4	721	0.7	978	0.9	1235	1.1	1365	1.1	1235	1.1	978	0.9	721	0.7
	1050	5	560	0.7	810	0.8	1060	0.9	1200	1.0	1060	0.9	810	0.8	560	0.7
	945	6	635	0.6	765	0.6	895	0.6	1025	0.7	895	0.6	765	0.6	635	0.6
Fresh Air	1705	0									1600	2.0	1480	1.9	1360	1.7
	1610	1					1635	2.0	1555	1.9	1490	1.8	1375	1.7	1260	1.5
	1515	2	1742	2.0	1631	1.9	1520	1.7	1430	1.6	1355	1.6	1230	1.4	1105	1.3
	1420	3	1620	1.7	1515	1.6	1410	1.5	1300	1.4	1230	1.4	1115	1.2	1000	1.1
	1325	4	1465	1.5	1370	1.4	1275	1.3	1190	1.3	1120	1.2	995	1.1	870	0.9
	1230	5	1325	1.3	1245	1.2	1165	1.1	1080	1.0	985	0.9	850	0.8	715	0.6
	1090	6	1170	1.0	1085	0.9	1000	0.8	905	0.8	824	0.7	743	0.6	662	0.6

Note: Brake Horse Power (BHP) is for one blower motor package only. **Operation in this zone will likely exceed FLA limits.**

Note: Airflow performance includes effect of clean, standard filter supplied with unit.

* See page 30 for installation details.

ELECTRICAL DATA

Standard Electrical Specifications							Optional Factory Installed VFD Electrical Specifications		
HP	Volts	HZ	Phase	FLA per motor	Min. Cir. Amps	Max. Overcurrent Protection Device	FLA per motor	Min. Cir. Amps	Max. Overcurrent Protection Device
2.0	208-230	60	Single	10.8-10.0	24.3	35	6.6-5.8	28.3	30
	208-230	60	Three	6.6-5.8	14.9	20	6.6-5.8	16.3	20
	460	60	Three	2.9	6.5	15	2.9	7.2	15
	575	60	Three	2.4	5.4	15	2.4	5.9	15

Specifications may be subject to change without notice.

RenewAire Energy Recovery Ventilation

HE2XRTC Energy Recovery Ventilator Standard

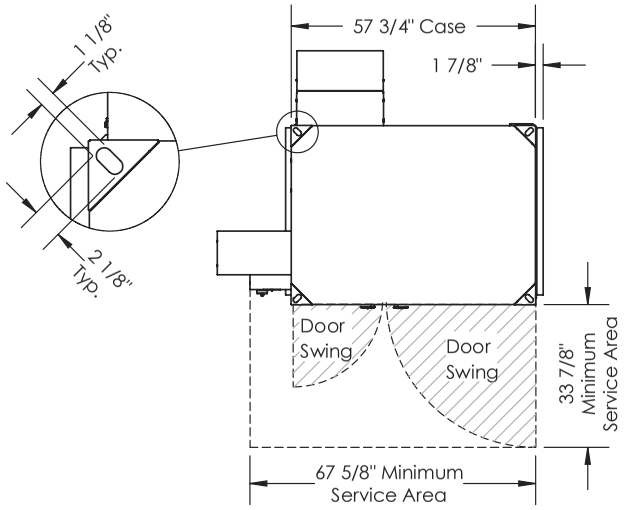

TOP VIEW

ABBREVIATION
EA: Exhaust Air to outside
OA: Outside Air intake
RA: Room Air to be exhausted
FA: Fresh Air to inside

INSTALLATION ORIENTATION
Unit must be installed in orientation shown.

NOTE:
1. UNLESS OTHERWISE SPECIFIED, DIMENSIONS ARE ROUNDED TO THE NEAREST EIGHTH OF AN INCH.

2. SPECIFICATIONS MAY BE SUBJECT TO CHANGE WITHOUT NOTICE.

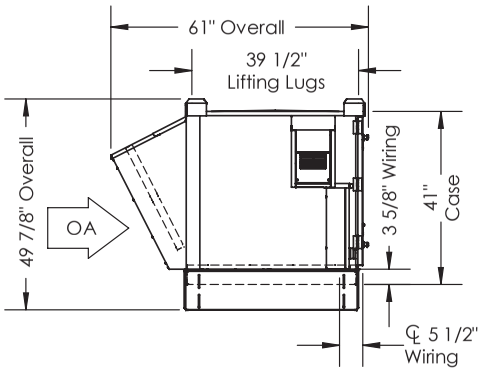

LEFT VIEW

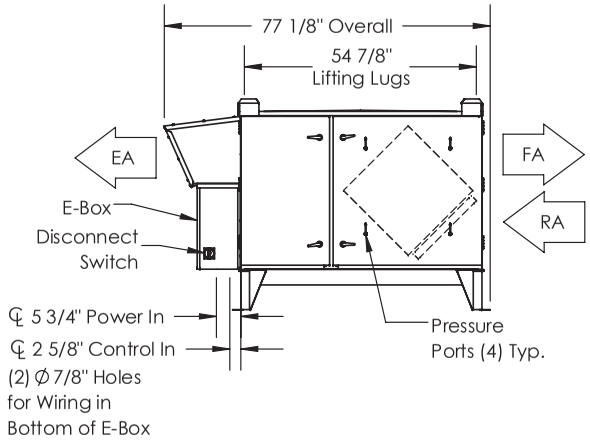

FRONT VIEW

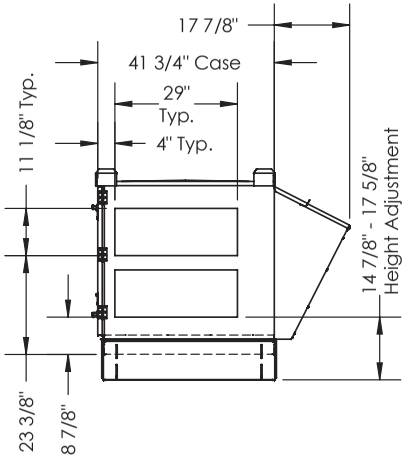

RIGHT VIEW

AIRFLOW CONFIGURATION
Available as shown in dimension drawing.

UNIT MOUNTING & APPLICATION
Must be mounted as shown. Airstreams can not be switched.

HE 3XINH

Energy Recovery Ventilator
Standard

AHRI CERTIFIED www.ahridirectory.org Globally Recognized. Industry Respected.

c UL us LISTED DUCTED HEAT RECOVERY VENTILATOR 89S5

INDOOR UNIT

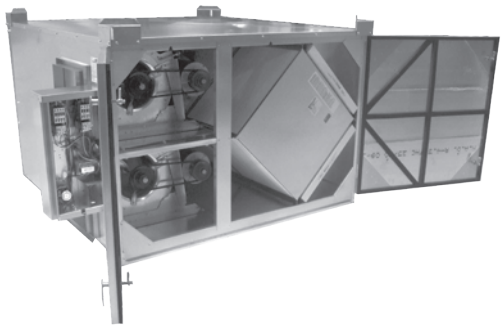

Download specification at:
renewaire.com/specifications

SPECIFICATIONS

Ventilation Type:
Static plate, heat and humidity transfer

Typical Airflow Range: 750-3,300 CFM

AHRI 1060 Certified Core: Three L125-G5

Standard Features:
TEFC Premium efficiency motors
Motor starters
Non-fused disconnect
24 VAC transformer/relay package
Cross-core differential pressure ports

Filters:
Total qty. 6, MERV 8: 20" x 20" x 2"

Unit Dimensions & Weight:
72 1/2" L x 63 1/4" W x 44" H
628-934 lbs., varies by option(s)

Max. Shipping Dimensions & Weight (on pallet):
80" L x 70" W x 50" H
1,029 lbs.

Motor(s):
Qty. 2, Belt drive blower/standard motor packages with adjustable sheaves (see table below)

Options:
Onboard variable frequency drives (VFDs) - one or both airstreams
Shaft grounding ring on motors with VFDs
Fused disconnect
Integrated programmable controls - enhanced, premium
Bypass economizer damper (see bypass DIM drawing) - dry-bulb temperature controls (standard), enthalpy controls (option)
Class 1 low leakage motorized isolation dampers - OA, RA or both airstreams
Qty. 2, Factory mounted filter alarms - both airstreams
Double wall construction
Exterior paint - white, custom colors

Accessories:
Filters - MERV 13, 2" (shipped loose)
Digital time clock - wall mount (TC7D-W), in exterior enclosure (TC7D-E)
Carbon dioxide sensor/control - wall mount (CO2-W), duct mount (CO2-D)
IAQ sensor - wall mount (IAQ-W), duct mount (IAQ-D)
Motion occupancy sensor/control - ceiling mount (MC-C), wall mount (MC-W)
Smoke Detector - duct mount (SD-D)
Electric duct heater - EK series (1–175 kW)
Indirect gas-fired duct furnace - GH series (50-400 MBH), installed downstream of any fans

AIRFLOW PERFORMANCE

Motor HP	Blower RPM	Sheave Adj. Turns Open	External Static Pressure (in. w.g.)													
			0.00		0.25		0.50		0.75		1.00		1.25		1.50	
			SCFM	BHP	SCFM	BHP	SCFM	BHP	SCFM	BHP	SCFM	BHP	SCFM	BHP	SCFM	BHP
2.0	1189	4	2185	1.0	2095	0.9	1900	0.8	1580	0.6	800	0.4				
	1329	2	2440	1.4	2360	1.3	2220	1.2	2020	1.0	1640	0.8	850	0.4		
	1470	0	2700	1.9	2640	1.8	2520	1.6	2360	1.5	2150	1.8	1770	1.0	1110	0.6
3.0	1496	3	2905	2.4	2815	2.3	2675	2.1	2505	1.9	2340	1.8	2220	1.6	1655	1.2
	1560	2	3030	2.7	2945	2.6	2825	2.5	2655	2.3	2445	2.1	2325	1.9	1990	1.6
	1656	0.5					3040	3.0	2875	2.8	2720	2.6	2575	2.4	2380	2.2
	1688	0							2950	2.9	2800	2.8	2650	2.6	2490	3.0
5.0	1686	3	3300	3.5	3225	3.4	3015	3.2	2855	3.0	2800	2.8	2645	2.6	2470	2.4
	1764	1.5					3290	3.8	3145	3.5	2995	3.3	2850	3.1	2705	2.9
	1843	0							3300	4.1	3175	3.8	3040	3.6	2900	3.4

Note: Brake Horse Power (BHP) is for one blower motor package only. **Operation in this zone will likely exceed FLA limits.** **Operation in this zone outside of core airflow limits.**

Note: Airflow performance includes effect of clean, standard filter supplied with unit.

ELECTRICAL DATA

Standard Electrical Specifications							Optional Factory Installed VFD Electrical Specifications		
HP	Volts	HZ	Phase	FLA per motor	Min. Cir. Amps	Max. Overcurrent Protection Device	FLA per motor	Min. Cir. Amps	Max. Overcurrent Protection Device
2.0	120	60	Single	20.0	45.0	60			
2.0	208-230	60	Single	10.8-10.0	24.3	35	6.6-5.8	28.3	30
	208-230	60	Three	6.6-5.8	14.9	20	6.6-5.8	16.3	20
	460	60	Three	2.9	6.5	15	2.9	7.2	15
	575	60	Three	2.4	5.4	15	2.4	5.9	15
3.0	208-230	60	Single	14.7-14	33.1	40	9.4-8.5	40.2	45
	208-230	60	Three	9.4-8.5	21.1	25	9.4-8.5	23.2	25
	460	60	Three	4.2	9.5	15	4.2	10.5	15
	575	60	Three	3.3	7.4	15	3.3	8.2	15
5.0	208-230	60	Three	14.5-13.4	32.6	45	14.5-13.4	35.9	45
	460	60	Three	6.7	15.1	20	6.7	16.6	20
	575	60	Three	5.3	11.9	15	5.3	13.1	15

Specifications may be subject to change without notice.

RenewAire Energy Recovery Ventilation

HE3XINH Energy Recovery Ventilator Standard

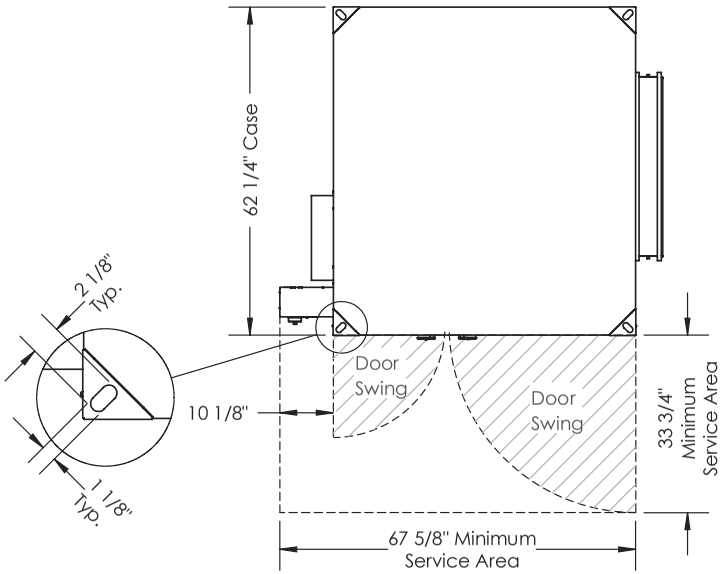

TOP VIEW

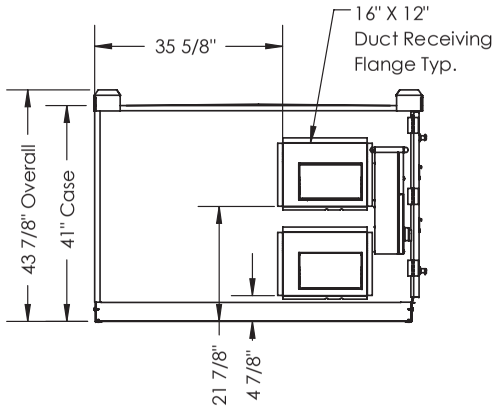

LEFT VIEW

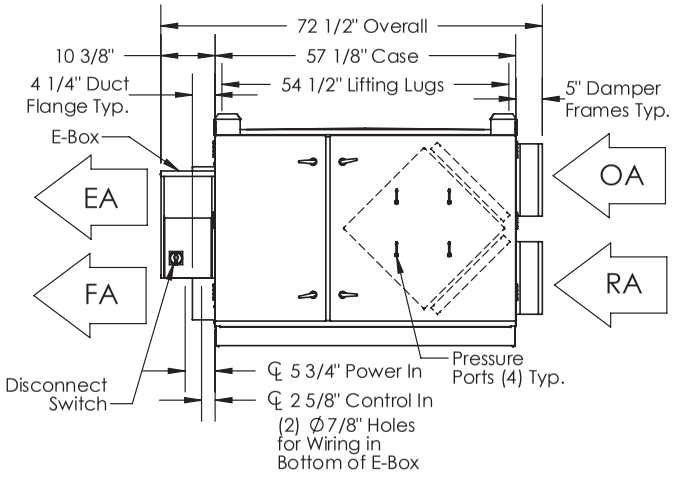

FRONT VIEW

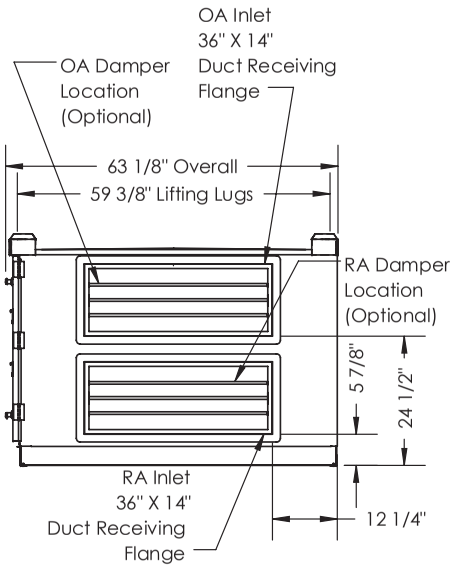

RIGHT VIEW

ABBREVIATIONS
EA: Exhaust Air to outside
OA: Outside Air intake
RA: Room Air to be exhausted
FA: Fresh Air to inside

INSTALLATION ORIENTATION
Unit must be installed in orientation shown.

NOTE
1. UNLESS OTHERWISE SPECIFIED, DIMENSIONS ARE ROUNDED TO THE NEAREST EIGHTH OF AN INCH.

2. SPECIFICATIONS MAY BE SUBJECT TO CHANGE WITHOUT NOTICE.

3. MIN. DUCT CLEARANCE FROM DAMPER BLADES WHEN FULLY OPENED TO BE 2". SMACNA RULES APPLY.

AIRFLOW CONFIGURATION
Available as shown in dimension drawing.

UNIT MOUNTING & APPLICATION
Must be mounted as shown. RA/EA airstream can be switched with OA/FA airstream unless certain options are selected.

HE 3XINH

Energy Recovery Ventilator
Standard with Bypass Economizer

AHRI CERTIFIED® www.ahridirectory.org
Globally Recognized. Industry Respected.

c UL us LISTED DUCTED HEAT RECOVERY VENTILATOR 89S5

INDOOR UNIT

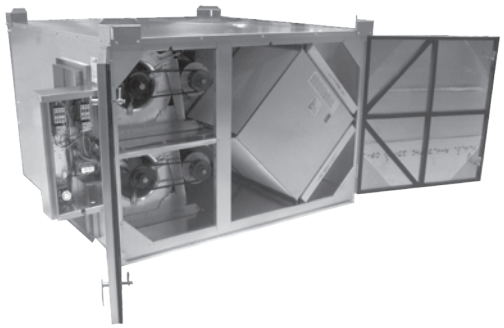

Download specification at:
renewaire.com/specifications

SPECIFICATIONS

Ventilation Type:
Static plate, heat and humidity transfer

Typical Airflow Range: 750-3,300 CFM

AHRI 1060 Certified Core: Three L125-G5

Standard Features:
TEFC Premium efficiency motors
Motor starters
Non-fused disconnect
24 VAC transformer/relay package
Cross-core differential pressure ports

Filters:
Total qty. 6, MERV 8: 20" x 20" x 2"

Unit Dimensions & Weight:
72 1/2" L x 63 1/4" W x 44" H
628-934 lbs., varies by option(s)

Max. Shipping Dimensions & Weight (on pallet):
80" L x 70" W x 50" H
1,029 lbs.

Motor(s):
Qty. 2, Belt drive blower/standard motor packages with adjustable sheaves (see table below)

Options:
Onboard variable frequency drives (VFDs) - one or both airstreams
Shaft grounding ring on motors with VFDs
Fused disconnect
Integrated programmable controls - enhanced, premium
Bypass economizer damper (see bypass DIM drawing) - dry-bulb temperature controls (standard), enthalpy controls (option)
Class 1 low leakage motorized isolation dampers - OA, RA or both airstreams
Qty. 2, Factory mounted filter alarms - both airstreams
Double wall construction
Exterior paint - white, custom colors

Accessories:
Filters - MERV 13, 2" (shipped loose)
Digital time clock - wall mount (TC7D-W), in exterior enclosure (TC7D-E)
Carbon dioxide sensor/control - wall mount (CO2-W), duct mount (CO2-D)
IAQ sensor - wall mount (IAQ-W), duct mount (IAQ-D)
Motion occupancy sensor/control - ceiling mount (MC-C), wall mount (MC-W)
Smoke Detector - duct mount (SD-D)
Electric duct heater - EK series (1–175 kW)
Indirect gas-fired duct furnace - GH series (50-400 MBH), installed downstream of any fans

AIRFLOW PERFORMANCE

Motor HP	Blower RPM	Sheave Adj. Turns Open	External Static Pressure (in. w.g.)													
			0.00		0.25		0.50		0.75		1.00		1.25		1.50	
			SCFM	BHP	SCFM	BHP	SCFM	BHP	SCFM	BHP	SCFM	BHP	SCFM	BHP	SCFM	BHP
2.0	1189	4	2185	1.0	2095	0.9	1900	0.8	1580	0.6	800	0.4				
	1329	2	2440	1.4	2360	1.3	2220	1.2	2020	1.0	1640	0.8	850	0.4		
	1470	0	2700	1.9	2640	1.8	2520	1.6	2360	1.5	2150	1.8	1770	1.0	1110	0.6
3.0	1496	3	2905	2.4	2815	2.3	2675	2.1	2505	1.9	2340	1.8	2220	1.6	1655	1.2
	1560	2	3030	2.7	2945	2.6	2825	2.5	2655	2.3	2445	2.1	2325	1.9	1990	1.6
	1656	0.5					3040	3.0	2875	2.8	2720	2.6	2575	2.4	2380	2.2
	1688	0							2950	2.9	2800	2.8	2650	2.6	2490	3.0
5.0	1686	3	3300	3.5	3225	3.4	3015	3.2	2855	3.0	2800	2.8	2645	2.6	2470	2.4
	1764	1.5					3290	3.8	3145	3.5	2995	3.3	2850	3.1	2705	2.9
	1843	0							3300	4.1	3175	3.8	3040	3.6	2900	3.4

Note: Brake Horse Power (BHP) is for one blower motor package only. **Operation in this zone will likely exceed FLA limits.** **Operation in this zone outside of core airflow limits.**

Note: Airflow performance includes effect of clean, standard filter supplied with unit.

ELECTRICAL DATA

Standard Electrical Specifications							Optional Factory Installed VFD Electrical Specifications		
HP	Volts	HZ	Phase	FLA per motor	Min. Cir. Amps	Max. Overcurrent Protection Device	FLA per motor	Min. Cir. Amps	Max. Overcurrent Protection Device
2.0	120	60	Single	20.0	45.0	60			
2.0	208-230	60	Single	10.8-10.0	24.3	35	6.6-5.8	28.3	30
	208-230	60	Three	6.6-5.8	14.9	20	6.6-5.8	16.3	20
	460	60	Three	2.9	6.5	15	2.9	7.2	15
	575	60	Three	2.4	5.4	15	2.4	5.9	15
3.0	208-230	60	Single	14.7-14	33.1	40	9.4-8.5	40.2	45
	208-230	60	Three	9.4-8.5	21.1	25	9.4-8.5	23.2	25
	460	60	Three	4.2	9.5	15	4.2	10.5	15
	575	60	Three	3.3	7.4	15	3.3	8.2	15
5.0	208-230	60	Three	14.5-13.4	32.6	45	14.5-13.4	35.9	45
	460	60	Three	6.7	15.1	20	6.7	16.6	20
	575	60	Three	5.3	11.9	15	5.3	13.1	15

Specifications may be subject to change without notice.

RenewAire® Energy Recovery Ventilation

HE3XINH Energy Recovery Ventilator Standard with Bypass Economizer

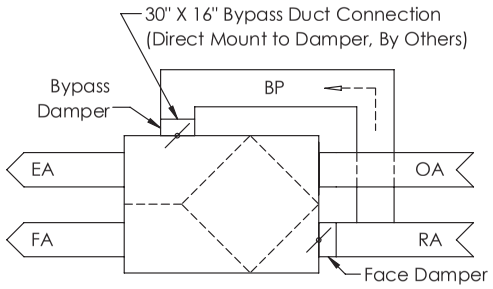

BYPASS AIRFLOW SCHEMATIC
FRONT VIEW

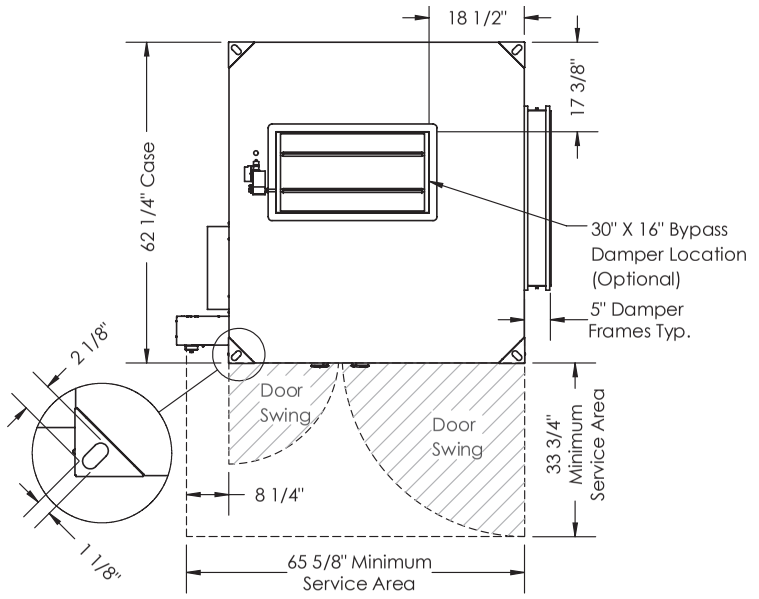

TOP VIEW

ABBREVIATIONS
EA: Exhaust Air to outside
OA: Outside Air intake
RA: Room Air to be exhausted
FA: Fresh Air to inside
BP: Bypass Air Intake

INSTALLATION ORIENTATION
Unit must be installed in orientation shown.

NOTE
1. UNLESS OTHERWISE SPECIFIED, DIMENSIONS ARE ROUNDED TO THE NEAREST EIGHTH OF AN INCH.

2. SPECIFICATIONS MAY BE SUBJECT TO CHANGE WITHOUT NOTICE.

3. MIN. DUCT CLEARANCE FROM DAMPER BLADE WHEN FULLY OPENED TO BE 2". SMACNA RULES APPLY.

4. UNITS WITH BYPASS WILL REQUIRE ADDITIONAL SPACE FOR THE CONNECTION OF THE BYPASS DUCT (BY OTHERS).

5. FOR INSTALLATION DETAILS, REFER TO I&O MANUAL SUPPLEMENT FOR BYPASS.

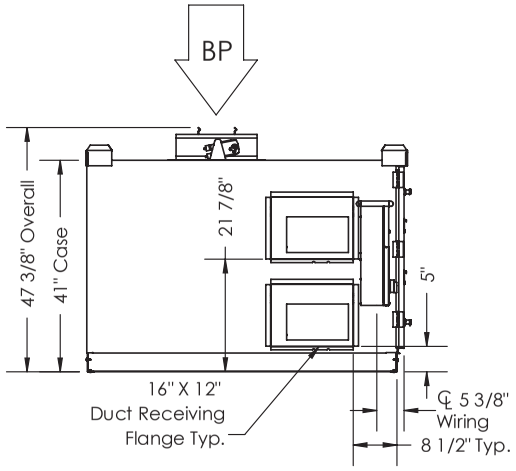

LEFT VIEW

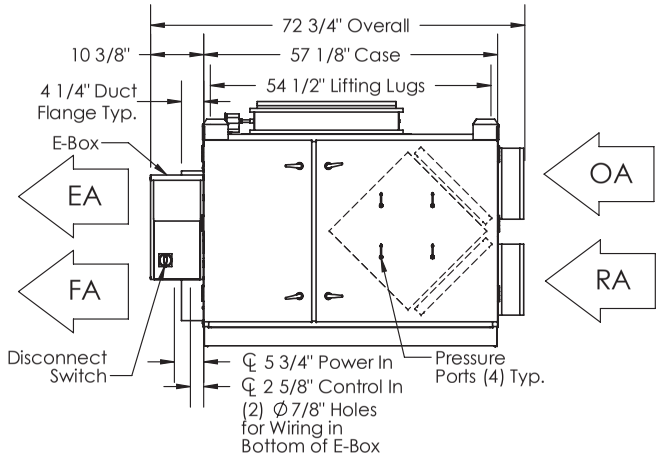

FRONT VIEW

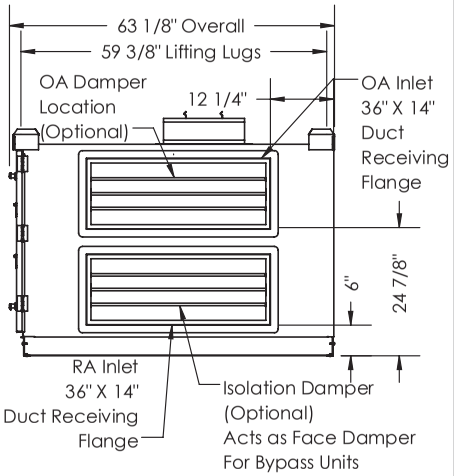

RIGHT VIEW

AIRFLOW CONFIGURATION
Available as shown in dimension drawing.

UNIT MOUNTING & APPLICATION
Must be mounted as shown. Airstreams can not be switched.

HE 3XINV

Energy Recovery Ventilator
Standard

AHRI CERTIFIED www.ahridirectory.org Globally Recognized. Industry Respected.

c UL us LISTED DUCTED HEAT RECOVERY VENTILATOR 89S5

INDOOR UNIT

Download specification at:
renewaire.com/specifications

SPECIFICATIONS

Ventilation Type:
Static plate, heat and humidity transfer

Typical Airflow Range: 750-3,300 CFM

AHRI 1060 Certified Core: Three L125-G5

Standard Features:
TEFC Premium efficiency motors
Motor starters
Non-fused disconnect
24 VAC transformer/relay package
Cross-core differential pressure ports

Filters:
Total qty. 6, MERV 8: 20" x 20" x 2"

Unit Dimensions & Weight:
50 3/4" L x 61 1/2" W x 62" H
590-999 lbs., varies by option(s)

Max. Shipping Dimensions & Weight (on pallet):
60" L x 90" W x 70" H
1,094 lbs.

Motor(s):
Qty. 2, Belt drive blower/standard motor packages with adjustable sheaves (see table below)

Options:
Onboard variable frequency drives (VFDs) - one or both airstreams
Shaft grounding ring on motors with VFDs
Fused disconnect
Integrated programmable controls - enhanced, premium
Bypass economizer damper (see bypass DIM drawing) - dry-bulb temperature controls (standard), enthalpy controls (option)
Class 1 low leakage motorized isolation dampers - OA, RA or both airstreams
Qty. 2, Factory mounted filter alarms - both airstreams
Double wall construction
Exterior paint - white, custom colors

Accessories:
Filters - MERV 13, 2" (shipped loose)
Digital time clock - wall mount (TC7D-W), in exterior enclosure (TC7D-E)
Carbon dioxide sensor/control - wall mount (CO2-W), duct mount (CO2-D)
IAQ sensor - wall mount (IAQ-W), duct mount (IAQ-D)
Motion occupancy sensor/control - ceiling mount (MC-C), wall mount (MC-W)
Smoke Detector - duct mount (SD-D)
Electric duct heater - EK series (1–175 kW)
Indirect gas-fired duct furnace - GH series (50-400 MBH), installed downstream of any fans

AIRFLOW PERFORMANCE

Motor HP	Blower RPM	Sheave Adj. Turns Open	External Static Pressure (in. w.g.)													
			0.00		0.25		0.50		0.75		1.00		1.25		1.50	
			SCFM	BHP	SCFM	BHP	SCFM	BHP	SCFM	BHP	SCFM	BHP	SCFM	BHP	SCFM	BHP
2.0	1195	4	2185	0.8	2000	0.7	1725	0.5	1210	0.4						
	1355	2	2440	1.1	2270	0.9	2060	0.8	1715	0.6	1210	0.5				
	1476	0	2700	1.5	2550	1.3	2380	1.2	2150	1.0	1750	0.8	1300	0.6		
3.0	1536	2.5	2810	2.1	2700	2.1	2560	1.9	2370	1.8	2140	1.6	1840	1.5	1420	1.1
	1632	1.5	2985	2.5	2880	2.4	2760	2.3	2590	2.2	2400	2.0	2145	1.8	1855	1.6
	1696	0.5	3100	2.8	3000	2.7	2900	2.7	2735	2.5	2505	2.3	2335	2.1	2065	1.9
	1728	0	3160	3.0	3055	2.9	2960	2.8	2800	2.6	2635	2.5	2425	2.3	2165	2.1
5.0	1749	2	3300	3.3	3200	3.1	3020	2.8	2860	2.6	2660	2.3	2440	2.1	2200	1.8
	1801	1			3300	3.4	3140	3.1	2980	2.8	2800	2.6	2585	2.8	2350	2.1
	1853	0					3245	3.4	3090	3.1	2920	2.9	2715	2.6	2500	2.4

Note: Brake Horse Power (BHP) is for one blower motor package only. **Operation in this zone outside of core airflow limits.**

Note: Airflow performance includes effect of clean, standard filter supplied with unit.

ELECTRICAL DATA

Standard Electrical Specifications							Optional Factory Installed VFD Electrical Specifications		
HP	Volts	HZ	Phase	FLA per motor	Min. Cir. Amps	Max. Overcurrent Protection Device	FLA per motor	Min. Cir. Amps	Max. Overcurrent Protection Device
2.0	120	60	Single	20.0	45.0	60			
2.0	208-230	60	Single	10.8-10.0	24.3	35	6.6-5.8	16.3	30
	208-230	60	Three	6.6-5.8	14.9	20	6.6-5.8	28.3	20
	460	60	Three	2.9	6.5	15	2.9	7.2	15
	575	60	Three	2.4	5.4	15	2.4	5.9	15
3.0	208-230	60	Single	14.7-14	33.1	40	9.4-8.5	40.2	45
	208-230	60	Three	9.4-8.5	21.1	25	9.4-8.5	23.2	25
	460	60	Three	4.2	9.5	15	4.2	10.5	15
	575	60	Three	3.3	7.4	15	3.3	8.2	15
5.0	208-230	60	Three	14.5-13.4	32.6	45	14.5-13.4	35.9	45
	460	60	Three	6.7	15.1	20	6.7	16.6	20
	575	60	Three	5.3	11.9	15	5.3	13.1	15

Specifications may be subject to change without notice.

RenewAire Energy Recovery Ventilation

HE3XINV Energy Recovery Ventilator Standard

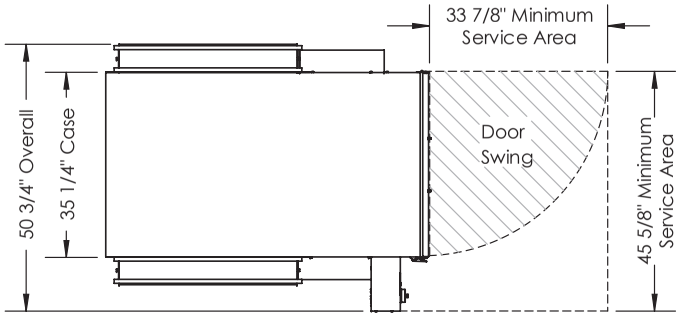

TOP VIEW

ABBREVIATION
EA: Exhaust Air to outside
OA: Outside Air intake
RA: Room Air to be exhausted
FA: Fresh Air to inside

INSTALLATION ORIENTATION
Unit must be installed in orientation shown.

NOTE:
1. UNLESS OTHERWISE SPECIFIED, DIMENSIONS ARE ROUNDED TO THE NEAREST EIGHTH OF AN INCH.

2. SPECIFICATIONS MAY BE SUBJECT TO CHANGE WITHOUT NOTICE.

3. MIN. DUCT CLEARANCE FROM DAMPER BLADES WHEN FULLY OPENED TO BE 2". SMACNA RULES APPLY.

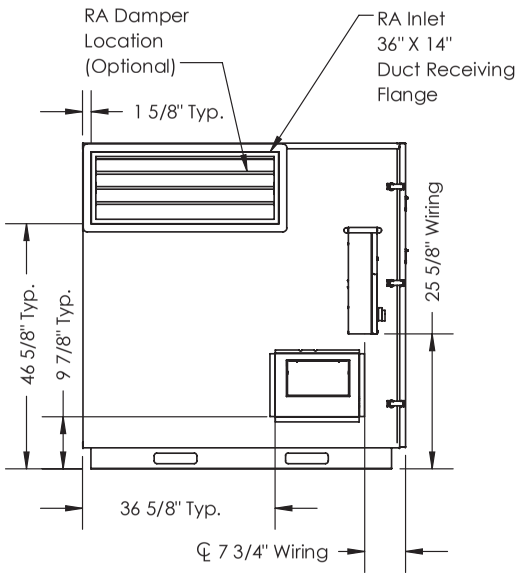

LEFT VIEW

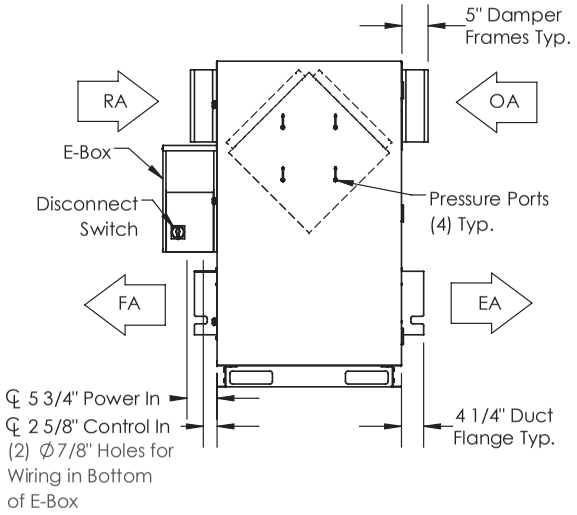

FRONT VIEW

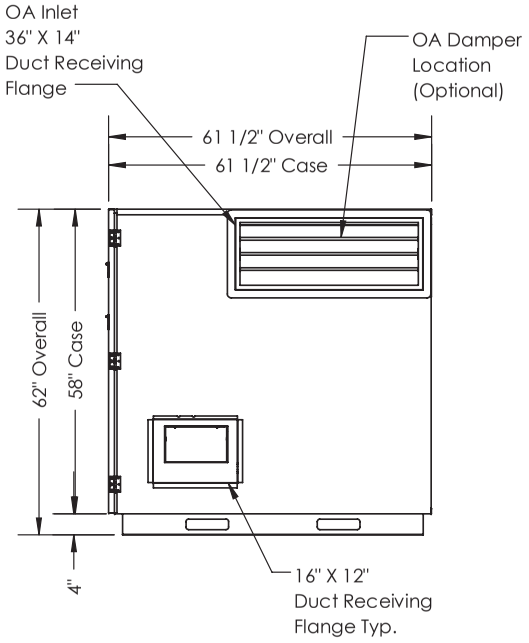

RIGHT VIEW

AIRFLOW CONFIGURATION
Available as shown in dimension drawing.

UNIT MOUNTING & APPLICATION
Must be mounted as shown. RA/EA airstream can be switched with OA/FA airstream unless certain options are selected.

HE 3XINV

Energy Recovery Ventilator
Standard with Bypass Economizer

AHRI CERTIFIED www.ahridirectory.org Globally Recognized. Industry Respected.

c UL us LISTED DUCTED HEAT RECOVERY VENTILATOR 89S5

INDOOR UNIT

Download specification at:
renewaire.com/specifications

SPECIFICATIONS

Ventilation Type:
Static plate, heat and humidity transfer

Typical Airflow Range: 750-3,300 CFM

AHRI 1060 Certified Core: Three L125-G5

Standard Features:
TEFC Premium efficiency motors
Motor starters
Non-fused disconnect
24 VAC transformer/relay package
Cross-core differential pressure ports

Filters:
Total qty. 6, MERV 8: 20" x 20" x 2"

Unit Dimensions & Weight:
50 3/4" L x 61 1/2" W x 62" H
590-999 lbs., varies by option(s)

Max. Shipping Dimensions & Weight (on pallet):
60" L x 90" W x 70" H
1,094 lbs.

Motor(s):
Qty. 2, Belt drive blower/standard motor packages with adjustable sheaves (see table below)

Options:
Onboard variable frequency drives (VFDs) - one or both airstreams
Shaft grounding ring on motors with VFDs
Fused disconnect
Integrated programmable controls - enhanced, premium
Bypass economizer damper (see bypass DIM drawing) - dry-bulb temperature controls (standard), enthalpy controls (option)
Class 1 low leakage motorized isolation dampers - OA, RA or both airstreams
Qty. 2, Factory mounted filter alarms - both airstreams
Double wall construction
Exterior paint - white, custom colors

Accessories:
Filters - MERV 13, 2" (shipped loose)
Digital time clock - wall mount (TC7D-W), in exterior enclosure (TC7D-E)
Carbon dioxide sensor/control - wall mount (CO2-W), duct mount (CO2-D)
IAQ sensor - wall mount (IAQ-W), duct mount (IAQ-D)
Motion occupancy sensor/control - ceiling mount (MC-C), wall mount (MC-W)
Smoke Detector - duct mount (SD-D)
Electric duct heater - EK series (1–175 kW)
Indirect gas-fired duct furnace - GH series (50-400 MBH), installed downstream of any fans

AIRFLOW PERFORMANCE

Motor HP	Blower RPM	Sheave Adj. Turns Open	External Static Pressure (in. w.g.)													
			0.00		0.25		0.50		0.75		1.00		1.25		1.50	
			SCFM	BHP	SCFM	BHP	SCFM	BHP	SCFM	BHP	SCFM	BHP	SCFM	BHP	SCFM	BHP
2.0	1195	4	2185	0.8	2000	0.7	1725	0.5	1210	0.4						
	1355	2	2440	1.1	2270	0.9	2060	0.8	1715	0.6	1210	0.5				
	1476	0	2700	1.5	2550	1.3	2380	1.2	2150	1.0	1750	0.8	1300	0.6		
3.0	1536	2.5	2810	2.1	2700	2.1	2560	1.9	2370	1.8	2140	1.6	1840	1.5	1420	1.1
	1632	1.5	2985	2.5	2880	2.4	2760	2.3	2590	2.2	2400	2.0	2145	1.8	1855	1.6
	1696	0.5	3100	2.8	3000	2.7	2900	2.7	2735	2.5	2505	2.3	2335	2.1	2065	1.9
	1728	0	3160	3.0	3055	2.9	2960	2.8	2800	2.6	2635	2.5	2425	2.3	2165	2.1
5.0	1749	2	3300	3.3	3200	3.1	3020	2.8	2860	2.6	2660	2.3	2440	2.1	2200	1.8
	1801	1			3300	3.4	3140	3.1	2980	2.8	2800	2.6	2585	2.8	2350	2.1
	1853	0					3245	3.4	3090	3.1	2920	2.9	2715	2.6	2500	2.4

Note: Brake Horse Power (BHP) is for one blower motor package only. **Operation in this zone outside of core airflow limits.**

Note: Airflow performance includes effect of clean, standard filter supplied with unit.

ELECTRICAL DATA

Standard Electrical Specifications							Optional Factory Installed VFD Electrical Specifications		
HP	Volts	HZ	Phase	FLA per motor	Min. Cir. Amps	Max. Overcurrent Protection Device	FLA per motor	Min. Cir. Amps	Max. Overcurrent Protection Device
2.0	120	60	Single	20.0	45.0	60			
2.0	208-230	60	Single	10.8-10.0	24.3	35	6.6-5.8	16.3	30
	208-230	60	Three	6.6-5.8	14.9	20	6.6-5.8	28.3	20
	460	60	Three	2.9	6.5	15	2.9	7.2	15
	575	60	Three	2.4	5.4	15	2.4	5.9	15
3.0	208-230	60	Single	14.7-14	33.1	40	9.4-8.5	40.2	45
	208-230	60	Three	9.4-8.5	21.1	25	9.4-8.5	23.2	25
	460	60	Three	4.2	9.5	15	4.2	10.5	15
	575	60	Three	3.3	7.4	15	3.3	8.2	15
5.0	208-230	60	Three	14.5-13.4	32.6	45	14.5-13.4	35.9	45
	460	60	Three	6.7	15.1	20	6.7	16.6	20
	575	60	Three	5.3	11.9	15	5.3	13.1	15

Specifications may be subject to change without notice.

RenewAire Energy Recovery Ventilation

HE3XINV Energy Recovery Ventilator Standard with Bypass Economizer

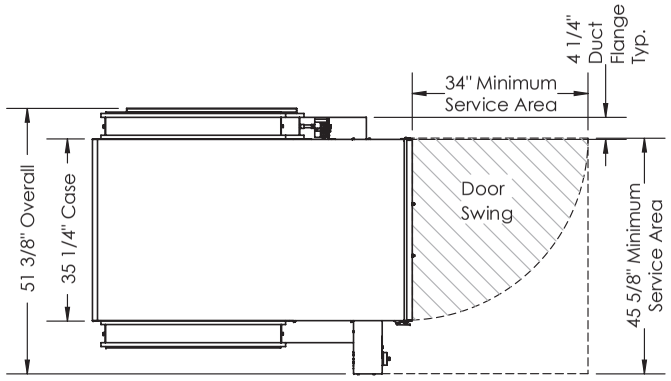

TOP VIEW

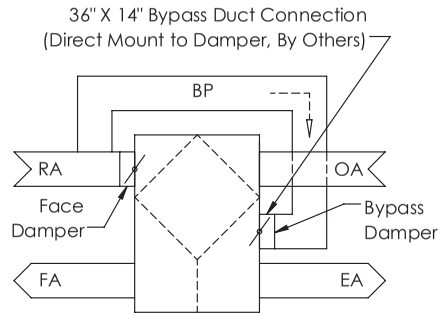

BYPASS AIRFLOW SCHEMATIC
FRONT VIEW

ABBREVIATIONS
EA: Exhaust Air to outside
OA: Outside Air intake
RA: Room Air to be exhausted
FA: Fresh Air to inside
BP: Bypass Air Intake

INSTALLATION ORIENTATION
Unit must be installed in orientation shown.

NOTE
1. UNLESS OTHERWISE SPECIFIED, DIMENSIONS ARE ROUNDED TO THE NEAREST EIGHTH OF AN INCH.

2. SPECIFICATIONS MAY BE SUBJECT TO CHANGE WITHOUT NOTICE.

3. MIN. DUCT CLEARANCE FROM DAMPER BLADE WHEN FULLY OPENED TO BE 2". SMACNA RULES APPLY.

4. UNITS WITH BYPASS WILL REQUIRE ADDITIONAL SPACE FOR THE CONNECTION OF THE BYPASS DUCT (BY OTHERS).

5. FOR INSTALLATION DETAILS, REFER TO I&O MANUAL SUPPLEMENT FOR BYPASS.

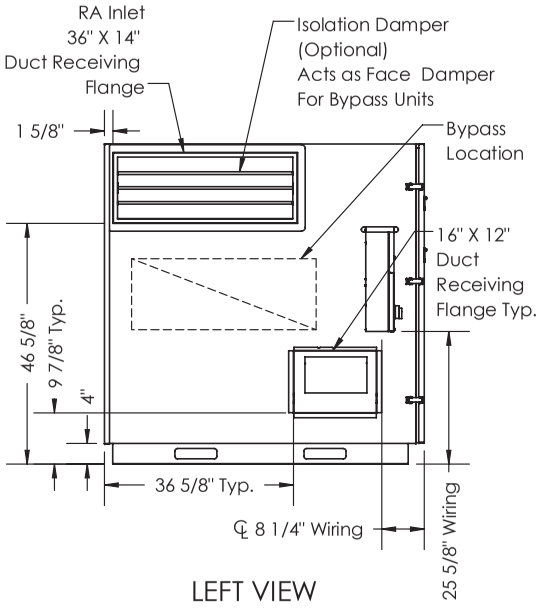

LEFT VIEW

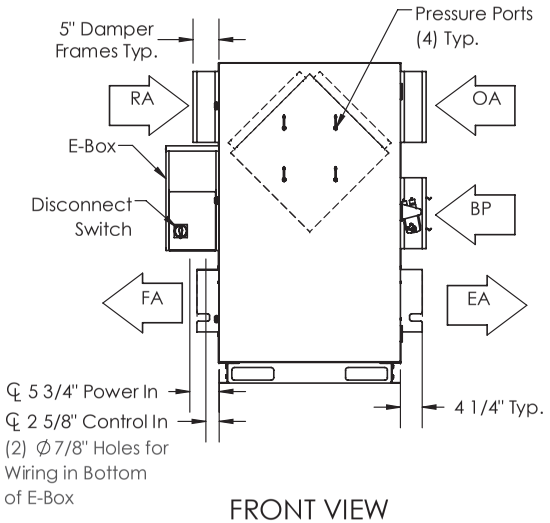

FRONT VIEW

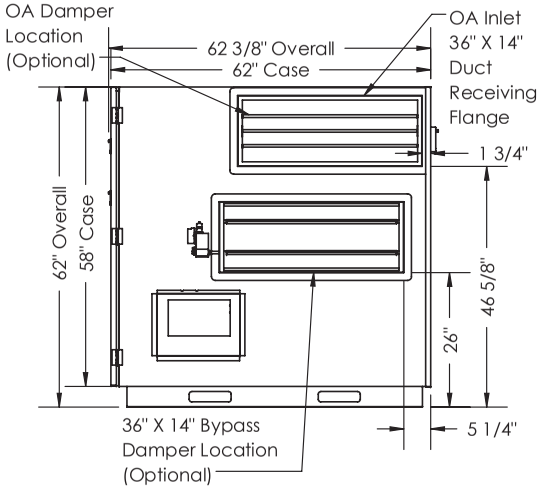

RIGHT VIEW

AIRFLOW CONFIGURATION
Available as shown in dimension drawing.

UNIT MOUNTING & APPLICATION
Must be mounted as shown. Airstreams can not be switched.

HE 3XRT

Energy Recovery Ventilator
Standard

AHRI CERTIFIED www.ahridirectory.org
Globally Recognized. Industry Respected.

c UL us LISTED DUCTED HEAT RECOVERY VENTILATOR 89S5

ROOFTOP UNIT

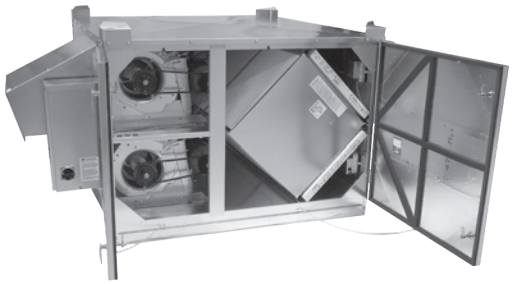

Download specification at:
renewaire.com/specifications

SPECIFICATIONS

Ventilation Type:
Static plate, heat and humidity transfer

Typical Airflow Range: 750-3,300 CFM

AHRI 1060 Certified Core: Three L125-G5

Standard Features:
TEFC Premium efficiency motors
Motor starters
Non-fused disconnect
24 VAC transformer/relay package
Cross-core differential pressure ports

Filters:
Total qty. 6, MERV 8: 20" x 20" x 2"

Unit Dimensions & Weight:
94" L x 63 1/4" W x 44" H
656-972 lbs., varies by option(s)

Max. Shipping Dimensions & Weight (on pallet):
80" L x 70" W x 67" H
1,067 lbs.

Motor(s):
Qty. 2, Belt drive blower/standard motor packages with adjustable sheaves (see table below)

Options:
Onboard variable frequency drives (VFDs) - one or both airstreams
Shaft grounding ring on motors with VFDs
Fused disconnect
Integrated programmable controls - enhanced, premium
Class 1 low leakage motorized isolation dampers - OA, RA or both airstreams
Qty. 2, Factory mounted filter alarms - both airstreams
Double wall construction
Exterior paint - white, custom colors

Accessories:
Filters - MERV 13, 2" (shipped loose)
Roof curb - standard 14"
Curb wind clip
Engineered combo curb for Carrier RTU
Engineered combo curb for Trane RTU
Digital time clock - wall mount (TC7D-W), in exterior enclosure (TC7D-E)
Carbon dioxide sensor/control - wall mount (CO2-W), duct mount (CO2-D)
IAQ sensor - wall mount (IAQ-W), duct mount (IAQ-D)
Motion occupancy sensor/control - ceiling mount (MC-C), wall mount (MC-W)
Smoke Detector - duct mount (SD-D)
Electric duct heater - EK series (1–175 kW); designed for indoor ductwork installation only
Indirect gas-fired duct furnace - GH series (50-400 MBH), installed downstream of any fans

AIRFLOW PERFORMANCE

Motor HP	Blower RPM	Sheave Adj. Turns Open	External Static Pressure (in. w.g.)													
			0.00		0.25		0.50		0.75		1.00		1.25		1.50	
			SCFM	BHP	SCFM	BHP	SCFM	BHP	SCFM	BHP	SCFM	BHP	SCFM	BHP	SCFM	BHP
2.0	1207	4	2130	1.0	1940	0.8	1695	0.6	1340	0.4						
	1347	2	2380	1.4	2210	1.2	2005	1.0	1725	0.8	1365	0.5				
	1488	0	2630	1.9	2470	1.6	2300	1.4	2100	1.2	1800	0.9	1435	0.7	820	0.4
3.0	1533	3	2790	2.5	2660	2.3	2500	2.1	2290	1.8	2040	1.6	1765	1.3	1265	1.0
	1597	2	2905	2.8	2785	2.6	2630	2.4	2340	2.1	2200	1.9	1955	1.6	1640	1.3
	1661	0.5			2810	3.0	2760	2.7	2585	2.5	2365	2.2	2140	1.9	1890	1.6
	1692	0					2820	2.9	2665	2.7	2450	2.4	2220	2.1	1980	1.8
5.0	1686	3	3110	3.5	3000	3.2	2890	3.0	2730	2.7	2520	2.4	2295	2.1	2000	1.8
	1764	1.5	3255	4.0	3150	3.7	3045	3.5	2905	3.2	2720	2.9	2520	2.5	2270	2.2
	1843	0			3300	4.2	3200	4.0	3075	3.7	2910	3.4	2715	3.0	2500	2.7

Note: Brake Horse Power (BHP) is for one blower motor package only. **Operation in this zone will likely exceed FLA limits.** **Operation in this zone outside of core airflow limits.**

Note: Airflow performance includes effect of clean, standard filter supplied with unit.

ELECTRICAL DATA

Standard Electrical Specifications							Optional Factory Installed VFD Electrical Specifications		
HP	Volts	HZ	Phase	FLA per motor	Min. Cir. Amps	Max. Overcurrent Protection Device	FLA per motor	Min. Cir. Amps	Max. Overcurrent Protection Device
2.0	120	60	Single	20.0	45.0	60			
2.0	208-230	60	Single	10.8-10.0	24.3	35	6.6-5.8	28.3	30
	208-230	60	Three	6.6-5.8	14.9	20	6.6-5.8	16.3	20
	460	60	Three	2.9	6.5	15	2.9	7.2	15
	575	60	Three	2.4	5.4	15	2.4	5.9	15
3.0	208-230	60	Single	14.7-14	33.1	40	9.4-8.5	40.2	45
	208-230	60	Three	9.4-8.5	21.1	25	9.4-8.5	23.2	25
	460	60	Three	4.2	9.5	15	4.24	10.5	15
	575	60	Three	3.3	7.4	15	3.3	8.2	15
5.0	208-230	60	Three	14.5-13.4	32.6	45	14.5-13.4	35.9	45
	460	60	Three	6.7	15.1	20	6.7	16.6	20
	575	60	Three	5.3	11.9	15	5.3	13.1	15

Specifications may be subject to change without notice.

RenewAire Energy Recovery Ventilation

HE3XRT (RTV/RTR) Energy Recovery Ventilator Standard

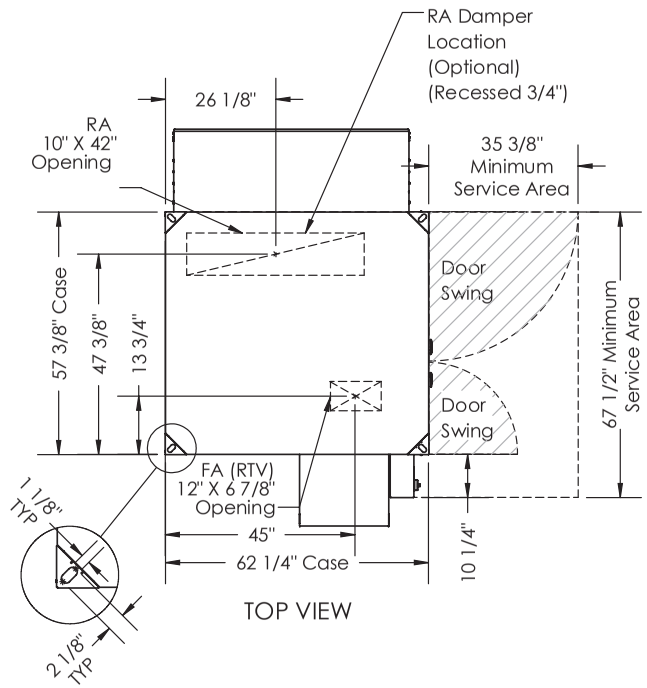

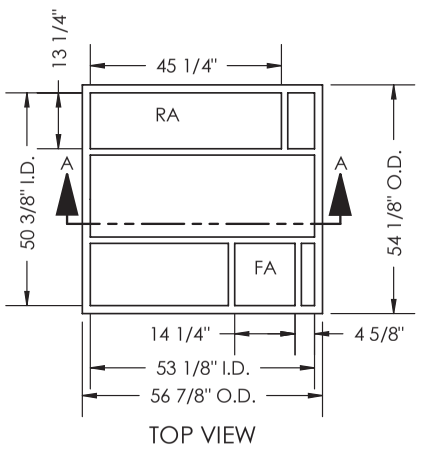

ABBREVIATIONS
EA: Exhaust Air to outside
OA: Outside Air intake
RA: Room Air to be exhausted
FA: Fresh Air to inside
RTV: Rooftop Vertical RA & FA
RTR: Rooftop Vertical RA Only

INSTALLATION ORIENTATION
Unit must be installed in orientation shown.

NOTE:
1. UNLESS OTHERWISE SPECIFIED, DIMENSIONS ARE ROUNDED TO THE NEAREST EIGHTH OF AN INCH.

2. SPECIFICATIONS MAY BE SUBJECT TO CHANGE WITHOUT NOTICE.

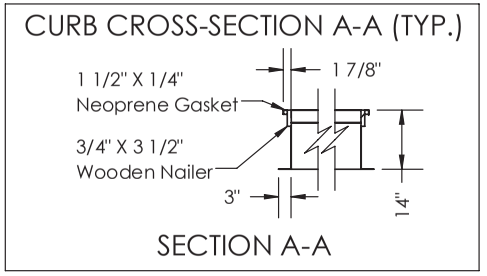

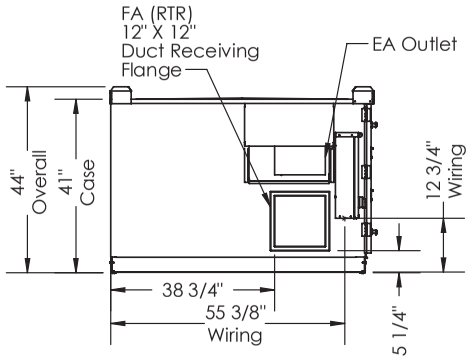

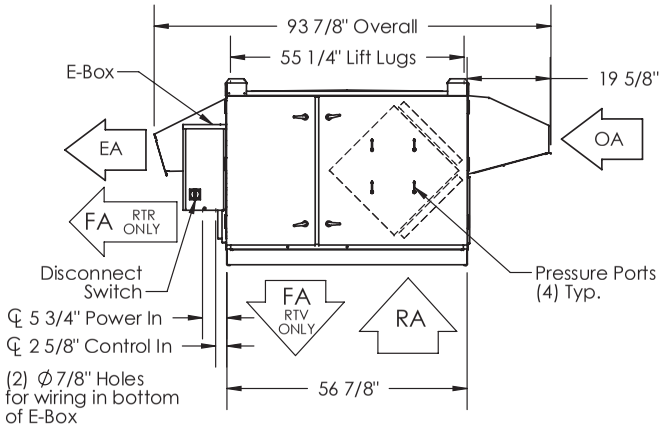

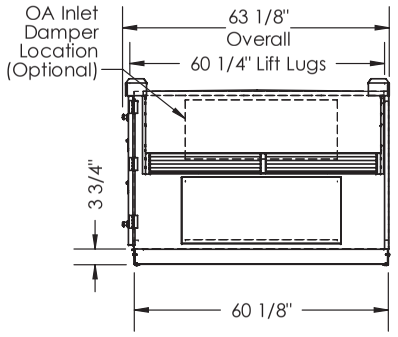

AIRFLOW CONFIGURATION
Available as shown:

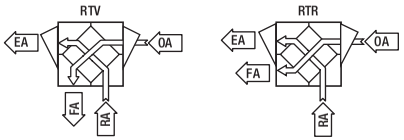

UNIT MOUNTING & APPLICATION
Must be mounted as shown. Airstreams can not be switched.

HE3XRT (RTH/RTF) Energy Recovery Ventilator Standard

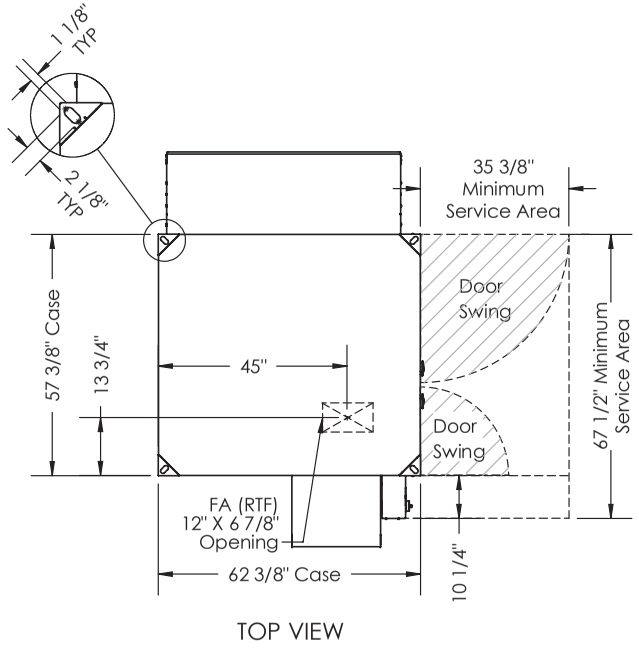

TOP VIEW

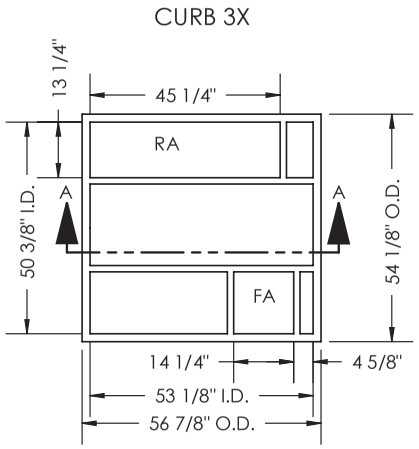

TOP VIEW

ABBREVIATIONS
EA: Exhaust Air to outside
OA: Outside Air intake
RA: Room Air to be exhausted
FA: Fresh Air to inside
RTF: Rooftop Vertical FA Only
RTH: Rooftop Horizontal RA & FA

INSTALLATION ORIENTATION
Unit must be installed in orientation shown.

NOTE:
1. UNLESS OTHERWISE SPECIFIED, DIMENSIONS ARE ROUNDED TO THE NEAREST EIGHTH OF AN INCH.

2. SPECIFICATIONS MAY BE SUBJECT TO CHANGE WITHOUT NOTICE.

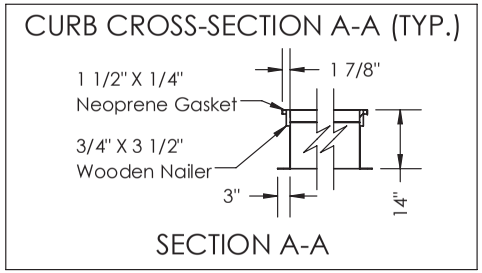

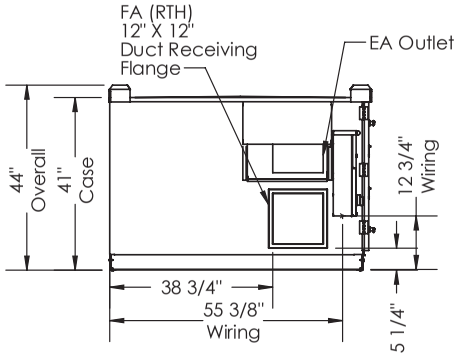

LEFT VIEW

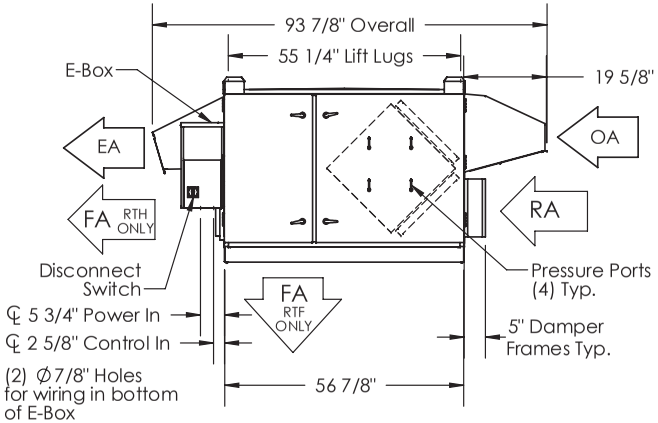

FRONT VIEW

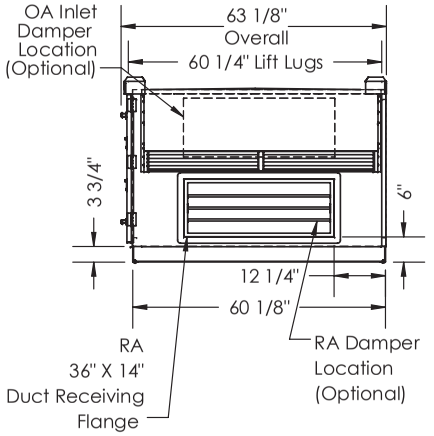

RIGHT VIEW

AIRFLOW CONFIGURATION

Available as shown:

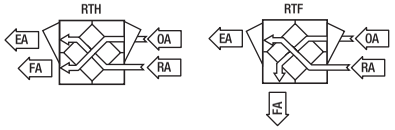

UNIT MOUNTING & APPLICATION

Must be mounted as shown. Airstreams can not be switched.

THIS PAGE IS INTENTIONALLY LEFT BLANK.

HE 3XRTC

Energy Recovery Ventilator
Standard

AHRI CERTIFIED www.ahridirectory.org Globally Recognized. Industry Respected.

c UL us LISTED DUCTED HEAT RECOVERY VENTILATOR 89S5

ROOFTOP UNIT
Direct Connect

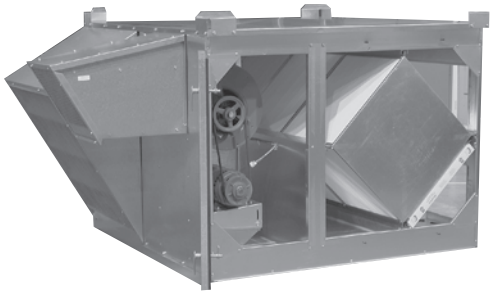

Download specification at:
renewaire.com/specifications

SPECIFICATIONS

Ventilation Type:
Static plate, heat and humidity transfer

Typical Airflow Range: 1,100-2,400 CFM

AHRI 1060 Certified Core: Three L125-G5

Standard Features:
TEFC Premium efficiency motors
Motor starters
Non-fused disconnect
24 VAC transformer/relay package
Cross-core differential pressure ports

Filters:
Total qty. 5, MERV 8: (3) 20" x 20" x 2" and (2) 16" x 25" x 2"

Unit Dimensions & Weight:
81 1/4" L x 63 1/2" W x 48 1/4" H
713-1,084 lbs., varies by option(s)

Max. Shipping Dimensions & Weight (on pallet):
80" L x 90" W x 80" H
1,225 lbs.

Motor(s):
Qty. 2, 3.0 HP ea., Belt drive blower/standard motor packages with adjustable sheaves

Options:
Onboard variable frequency drives (VFDs) - one or both airstreams
Shaft grounding ring on motors with VFDs
Fused disconnect
Integrated programmable controls - enhanced, premium
Qty. 2, Factory mounted filter alarms - both airstreams
Double wall construction
Exterior paint - white, custom colors

Accessories:
Filters - MERV 13, 2" (shipped loose)
RTC transition kit - for vertical RTU, for horizontal RTU
Rooftop RTC transition paint - white, custom colors
Digital time clock - wall mount (TC7D-W), in exterior enclosure (TC7D-E)
Carbon dioxide sensor/control - wall mount (CO2-W), duct mount (CO2-D)
IAQ sensor - wall mount (IAQ-W), duct mount (IAQ-D)
Motion occupancy sensor/control - ceiling mount (MC-C), wall mount (MC-W)
Smoke Detector - duct mount (SD-D)

Note: Electric Duct Heater and Indirect Gas-Fired Duct Furnace are not available on RTC units.

AIRFLOW PERFORMANCE

	Blower RPM Nominal	Sheave Adj. Turns Open	Tie-In Directly to Rooftop A/C Unit*						Unit Ducted Indendently*							
			Static Pressure in Adjacent Air Handler (Inches Water Column)						External Static Pressure (Inches Water Column)							
			-0.75		-0.5		-0.25		0.0		+0.25		+0.5		+0.75	
			CFM	BHP	CFM	BHP	CFM	BHP	CFM	BHP	CFM	BHP	CFM	BHP	CFM	BHP
Exhaust Air	1510	0	2010	2.7											2010	2.7
	1465	1	1920	2.3	2130	2.9							2130	2.9	1920	2.3
	1420	2	1830	1.9	2035	2.5	2240	3.0			2240	3.0	2035	2.5	1830	1.9
	1375	3	1750	1.1	1945	1.9	2140	2.6	2400	2.7	2140	2.6	1945	1.9	1750	1.1
	1330	4	1690	1.0	1860	1.5	2030	1.9	2330	2.6	2030	1.9	1860	1.5	1690	1.0
	1285	5	1510	0.9	1725	1.0	1940	1.1	2250	2.1	1940	1.1	1725	1.0	1510	0.9
	1240	6	1320	0.8	1590	0.5	1860	0.3	2165	1.5	1860	0.3	1590	0.5	1320	0.8
Fresh Air	1825	0							2250	2.9	2100	2.5	1865	2.3	1630	2.1
	1770	1			2525	3.0	2338	2.7	2195	2.6	2025	2.3	1785	2.1	1545	1.8
	1715	2	2605	2.7	2430	2.6	2255	2.4	2120	2.3	1960	2.0	1700	1.2	1440	1.4
	1660	3	2515	2.4	2345	2.2	2175	1.9	2050	1.8	1900	1.6	1620	0.6	1340	1.0
	1605	4	2430	2.2	2270	1.8	2110	1.3	1980	1.3	1830	1.3	1560	0.4	1290	0.5
	1550	5	2355	1.2	2185	1.1	2015	1.0	1900	0.6	1765	0.4	1540	0.3	1200	0.4
	1495	6	2230	0.8	2090	0.7	1950	0.5	1840	0.4	1730	0.3	1500	0.2	1100	0.2

Note: Brake Horse Power (BHP) is for one blower motor package only. **Operation in this zone will likely exceed FLA limits.**

Note: Airflow performance includes effect of clean, standard filter supplied with unit.

* See page 38 for installation details.

ELECTRICAL DATA

Standard Electrical Specifications							Optional Factory Installed VFD Electrical Specifications		
HP	Volts	HZ	Phase	FLA per motor	Min. Cir. Amps	Max. Overcurrent Protection Device	FLA per motor	Min. Cir. Amps	Max. Overcurrent Protection Device
3.0	208-230	60	Single	14.7-14	33.1	40	9.4-8.5	40.2	45
	208-230	60	Three	9.4-8.5	21.1	25	9.4-8.5	23.2	25
	460	60	Three	4.2	9.5	15	4.24	10.5	15
	575	60	Three	3.3	7.4	15	3.3	8.2	15

Specifications may be subject to change without notice.

RenewAire Energy Recovery Ventilation

HE3XRTC Energy Recovery Ventilator Standard

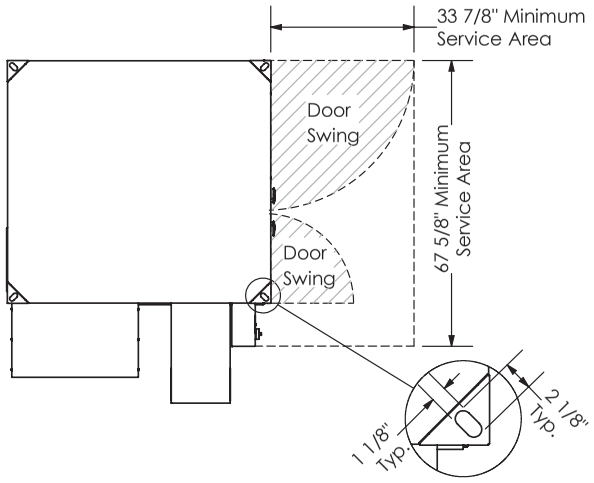

TOP VIEW

ABBREVIATIONS
EA: Exhaust Air to outside
OA: Outside Air intake
RA: Room Air to be exhausted
FA: Fresh Air to inside

INSTALLATION ORIENTATION
Unit must be installed in orientation shown.

NOTE:
1. UNLESS OTHERWISE SPECIFIED, DIMENSIONS ARE ROUNDED TO THE NEAREST EIGHTH OF AN INCH.

2. SPECIFICATIONS MAY BE SUBJECT TO CHANGE WITHOUT NOTICE.

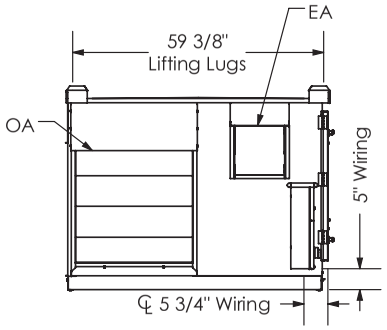

LEFT VIEW

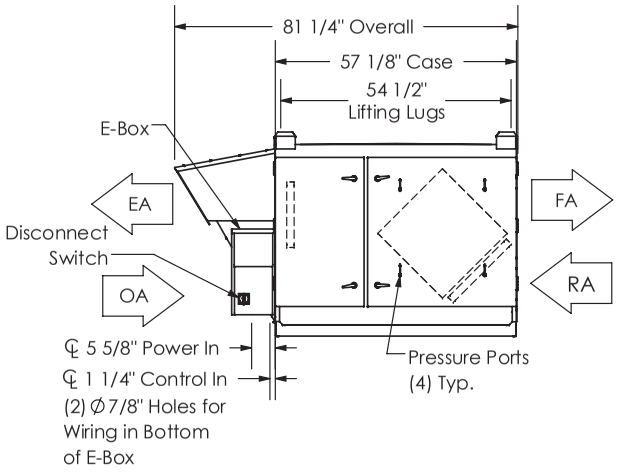

FRONT VIEW

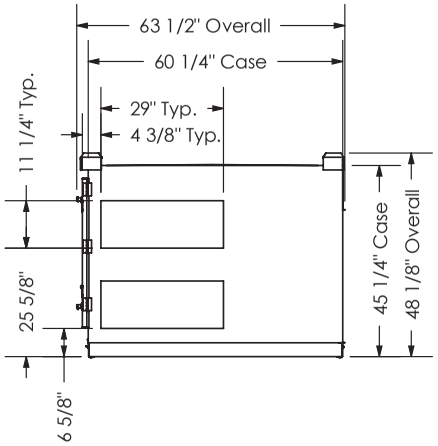

RIGHT VIEW

AIRFLOW CONFIGURATION
Available as shown in dimension drawing.

UNIT MOUNTING & APPLICATION
Must be mounted as shown. Airstreams can not be switched.

HE 4XINH

Energy Recovery Ventilator
Standard

AHRI CERTIFIED www.ahridirectory.org
Globally Recognized. Industry Respected.

c UL us LISTED DUCTED HEAT RECOVERY VENTILATOR 89S5

INDOOR UNIT

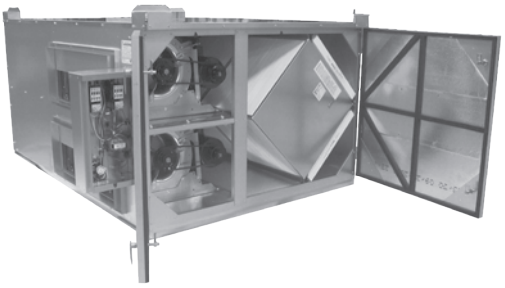

Download specification at:
renewaire.com/specifications

SPECIFICATIONS

Ventilation Type:
Static plate, heat and humidity transfer

Typical Airflow Range: 1,000-4,400 CFM

AHRI 1060 Certified Core: Four L125-G5

Standard Features:
TEFC Premium efficiency motors
Motor starters
Non-fused disconnect
24 VAC transformer/relay package
Cross-core differential pressure ports

Filters:
Total qty. 8, MERV 8: 20" x 20" x 2"

Unit Dimensions & Weight:
72 3/4" L x 82 3/4" W x 44" H
723-1,092 lbs., varies by option(s)

Max. Shipping Dimensions & Weight (on pallet):
80" L x 90" W x 50" H
1,228 lbs.

Motor(s):
Qty. 2, Belt drive blower/standard motor packages with adjustable sheaves (see table below)

Options:
Onboard variable frequency drives (VFDs) - one or both airstreams
Shaft grounding ring on motors with VFDs
Fused disconnect
Integrated programmable controls - enhanced, premium
Bypass economizer damper (see bypass DIM drawing) - dry-bulb temperature controls (standard), enthalpy controls (option)
Class 1 low leakage motorized isolation dampers - OA, RA or both airstreams
Qty. 2, Factory mounted filter alarms - both airstreams
Double wall construction
Exterior paint - white, custom colors

Accessories:
Filters - MERV 13, 2" (shipped loose)
Digital time clock - wall mount (TC7D-W), in exterior enclosure (TC7D-E)
Carbon dioxide sensor/control - wall mount (CO2-W), duct mount (CO2-D)
IAQ sensor - wall mount (IAQ-W), duct mount (IAQ-D)
Motion occupancy sensor/control - ceiling mount (MC-C), wall mount (MC-W)
Smoke Detector - duct mount (SD-D)
Electric duct heater - EK series (1–175 kW)
Indirect gas-fired duct furnace - GH series (50-400 MBH), installed downstream of any fans

AIRFLOW PERFORMANCE

Motor HP	Blower RPM	Sheave Adj. Turns Open	External Static Pressure (in. w.g.)													
			0.00		0.25		0.50		0.75		1.00		1.25		1.50	
			SCFM	BHP	SCFM	BHP	SCFM	BHP	SCFM	BHP	SCFM	BHP	SCFM	BHP	SCFM	BHP
2	1187	4	3215	1.5	2990	1.4	2535	1.2	2120	0.9	1360	0.7				
	1290	2.5	3505	2.0	3300	1.9	3000	1.7	2610	1.4	2060	1.1	1180	0.6		
	1358	1.5					3220	2.0	2885	1.8	2415	1.4	1790	1.1		
	1462	0									2900	2.0	2400	1.6	1730	1.2
3	1448	4	3945	2.9	3765	2.8	3515	2.4	3200	2.1	2845	1.9	2310	1.5	1670	1.2
	1520	3					3740	2.9	3475	2.6	3145	2.3	2695	2.0	2165	1.6
	1591	2									3415	2.8	3050	2.4	2580	2.1
	1663	1											3380	3.0	2930	2.5
	1735	0													3300	3.0
5	1591	4	4335	3.8	4185	4.0	3965	3.4	3710	3.1	3410	2.8	3050	2.5	2580	2.1
	1696	2					4280	4.1	4060	3.9	3800	3.5	3510	3.2	3100	2.8
	1800	0							4395	4.7	4165	4.3	3900	4.0	3600	3.7

Note: Brake Horse Power (BHP) is for one blower motor package only. **Operation in this zone will likely exceed FLA limits.** **Operation in this zone outside of core airflow limits.**

Note: Airflow performance includes effect of clean, standard filter supplied with unit.

ELECTRICAL DATA

Standard Electrical Specifications							Optional Factory Installed VFD Electrical Specifications		
HP	Volts	HZ	Phase	FLA per motor	Min. Cir. Amps	Max. Overcurrent Protection Device	FLA per motor	Min. Cir. Amps	Max. Overcurrent Protection Device
2.0	120	60	Single	20.0	45.0	60			
2.0	208-230	60	Single	10.8-10.0	24.3	35	6.6-5.8	28.3	30
	208-230	60	Three	6.6-5.8	14.9	20	6.6-5.8	16.3	20
	460	60	Three	2.9	6.5	15	2.9	7.2	15
	575	60	Three	2.4	5.4	15	2.4	5.9	15
3.0	208-230	60	Single	14.7-14	33.1	40	9.4-8.5	40.2	45
	208-230	60	Three	9.4-8.5	21.1	25	9.4-8.5	23.2	25
	460	60	Three	4.2	9.5	15	4.2	10.5	15
	575	60	Three	3.3	7.4	15	3.3	8.2	15
5.0	208-230	60	Three	14.5-13.4	32.6	45	14.5-13.4	35.9	45
	460	60	Three	6.7	15.1	20	6.7	16.6	20
	575	60	Three	5.3	11.9	15	5.3	13.1	15

Specifications may be subject to change without notice.

RenewAire Energy Recovery Ventilation

HE4XINH Energy Recovery Ventilator Standard

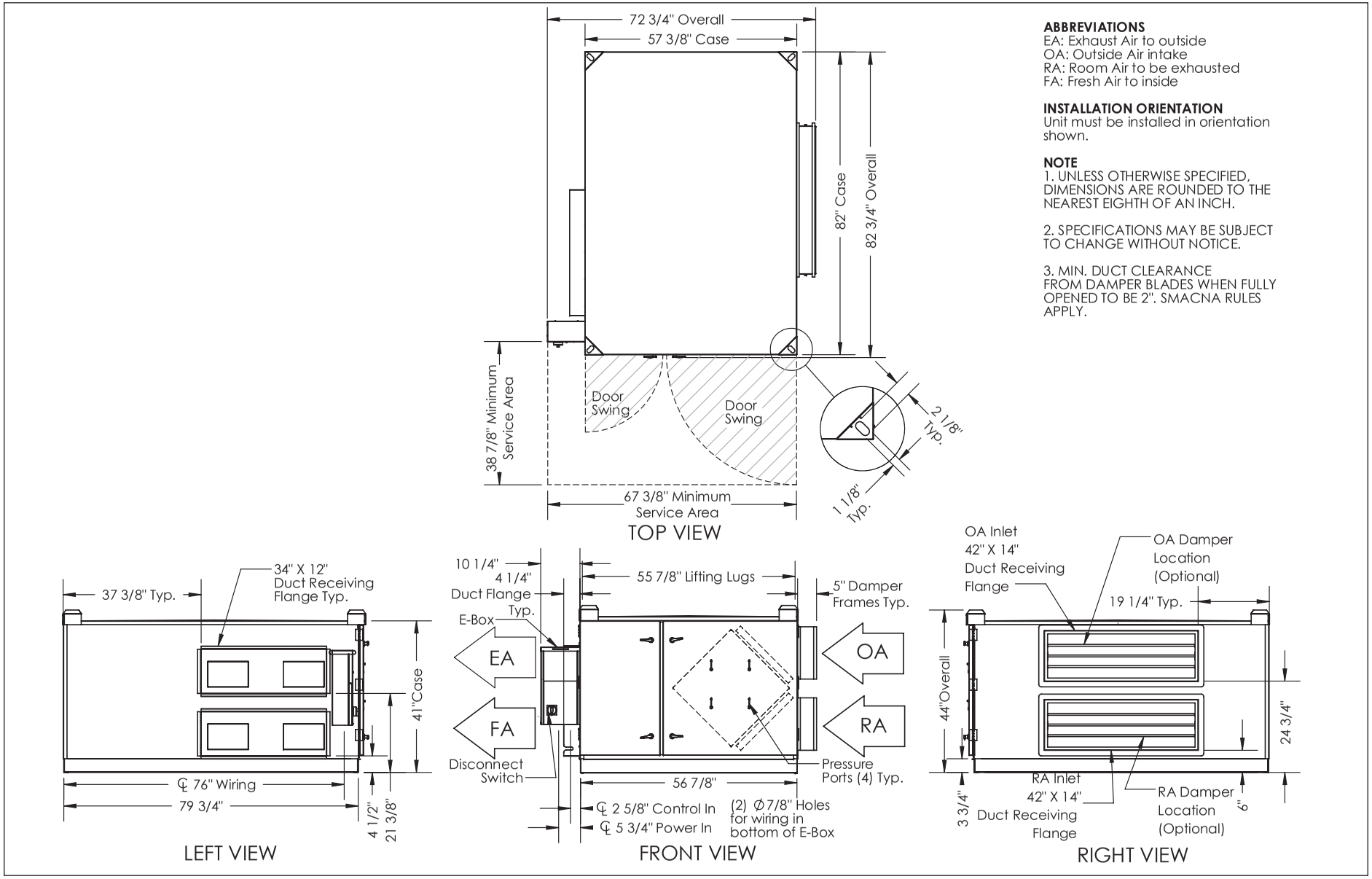

ABBREVIATIONS
EA: Exhaust Air to outside
OA: Outside Air intake
RA: Room Air to be exhausted
FA: Fresh Air to inside

INSTALLATION ORIENTATION
Unit must be installed in orientation shown.

NOTE
1. UNLESS OTHERWISE SPECIFIED, DIMENSIONS ARE ROUNDED TO THE NEAREST EIGHTH OF AN INCH.

2. SPECIFICATIONS MAY BE SUBJECT TO CHANGE WITHOUT NOTICE.

3. MIN. DUCT CLEARANCE FROM DAMPER BLADES WHEN FULLY OPENED TO BE 2". SMACNA RULES APPLY.

AIRFLOW CONFIGURATION
Available as shown in dimension drawing.

UNIT MOUNTING & APPLICATION
Must be mounted as shown. RA/EA airstream can be switched with OA/FA airstream unless certain options are selected.

HE 4XINH

Energy Recovery Ventilator
Standard with Bypass Economizer

AHRI CERTIFIED® www.ahridirectory.org
Globally Recognized. Industry Respected.

c UL us LISTED DUCTED HEAT RECOVERY VENTILATOR 89S5

INDOOR UNIT

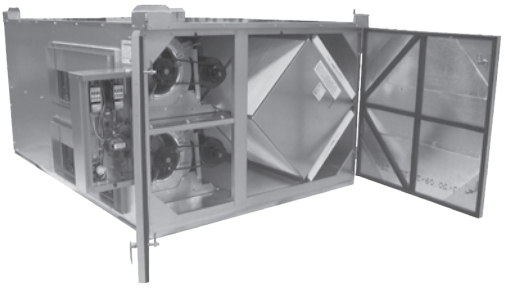

Download specification at:
renewaire.com/specifications

SPECIFICATIONS

Ventilation Type:
Static plate, heat and humidity transfer

Typical Airflow Range: 1,000-4,400 CFM

AHRI 1060 Certified Core: Four L125-G5

Standard Features:
TEFC Premium efficiency motors
Motor starters
Non-fused disconnect
24 VAC transformer/relay package
Cross-core differential pressure ports

Filters:
Total qty. 8, MERV 8: 20" x 20" x 2"

Unit Dimensions & Weight:
72 3/4" L x 82 3/4" W x 44" H
723-1,092 lbs., varies by option(s)

Max. Shipping Dimensions & Weight (on pallet):
80" L x 90" W x 50" H
1,228 lbs.

Motor(s):
Qty. 2, Belt drive blower/standard motor packages with adjustable sheaves (see table below)

Options:
Onboard variable frequency drives (VFDs) - one or both airstreams
Shaft grounding ring on motors with VFDs
Fused disconnect
Integrated programmable controls - enhanced, premium
Bypass economizer damper (see bypass DIM drawing) - dry-bulb temperature controls (standard), enthalpy controls (option)
Class 1 low leakage motorized isolation dampers - OA, RA or both airstreams
Qty. 2, Factory mounted filter alarms - both airstreams
Double wall construction
Exterior paint - white, custom colors

Accessories:
Filters - MERV 13, 2" (shipped loose)
Digital time clock - wall mount (TC7D-W), in exterior enclosure (TC7D-E)
Carbon dioxide sensor/control - wall mount (CO2-W), duct mount (CO2-D)
IAQ sensor - wall mount (IAQ-W), duct mount (IAQ-D)
Motion occupancy sensor/control - ceiling mount (MC-C), wall mount (MC-W)
Smoke Detector - duct mount (SD-D)
Electric duct heater - EK series (1–175 kW)
Indirect gas-fired duct furnace - GH series (50-400 MBH), installed downstream of any fans

AIRFLOW PERFORMANCE

Motor HP	Blower RPM	Sheave Adj. Turns Open	External Static Pressure (in. w.g.)													
			0.00		0.25		0.50		0.75		1.00		1.25		1.50	
			SCFM	BHP	SCFM	BHP	SCFM	BHP	SCFM	BHP	SCFM	BHP	SCFM	BHP	SCFM	BHP
2	1187	4	3215	1.5	2990	1.4	2535	1.2	2120	0.9	1360	0.7				
	1290	2.5	3505	2.0	3300	1.9	3000	1.7	2610	1.4	2060	1.1	1180	0.6		
	1358	1.5					3220	2.0	2885	1.8	2415	1.4	1790	1.1		
	1462	0									2900	2.0	2400	1.6	1730	1.2
3	1448	4	3945	2.9	3765	2.8	3515	2.4	3200	2.1	2845	1.9	2310	1.5	1670	1.2
	1520	3					3740	2.9	3475	2.6	3145	2.3	2695	2.0	2165	1.6
	1591	2									3415	2.8	3050	2.4	2580	2.1
	1663	1											3380	3.0	2930	2.5
	1735	0													3300	3.0
5	1591	4	4335	3.8	4185	4.0	3965	3.4	3710	3.1	3410	2.8	3050	2.5	2580	2.1
	1696	2					4280	4.1	4060	3.9	3800	3.5	3510	3.2	3100	2.8
	1800	0							4395	4.7	4165	4.3	3900	4.0	3600	3.7

Note: Brake Horse Power (BHP) is for one blower motor package only. **Operation in this zone will likely exceed FLA limits.** **Operation in this zone outside of core airflow limits.**

Note: Airflow performance includes effect of clean, standard filter supplied with unit.

ELECTRICAL DATA

Standard Electrical Specifications							Optional Factory Installed VFD Electrical Specifications		
HP	Volts	HZ	Phase	FLA per motor	Min. Cir. Amps	Max. Overcurrent Protection Device	FLA per motor	Min. Cir. Amps	Max. Overcurrent Protection Device
2.0	120	60	Single	20.0	45.0	60			
2.0	208-230	60	Single	10.8-10.0	24.3	35	6.6-5.8	28.3	30
	208-230	60	Three	6.6-5.8	14.9	20	6.6-5.8	16.3	20
	460	60	Three	2.9	6.5	15	2.9	7.2	15
	575	60	Three	2.4	5.4	15	2.4	5.9	15
3.0	208-230	60	Single	14.7-14	33.1	40	9.4-8.5	40.2	45
	208-230	60	Three	9.4-8.5	21.1	25	9.4-8.5	23.2	25
	460	60	Three	4.2	9.5	15	4.2	10.5	15
	575	60	Three	3.3	7.4	15	3.3	8.2	15
5.0	208-230	60	Three	14.5-13.4	32.6	45	14.5-13.4	35.9	45
	460	60	Three	6.7	15.1	20	6.7	16.6	20
	575	60	Three	5.3	11.9	15	5.3	13.1	15

Specifications may be subject to change without notice.

RenewAire Energy Recovery Ventilation

HE4XINH Energy Recovery Ventilator Standard with Bypass Economizer

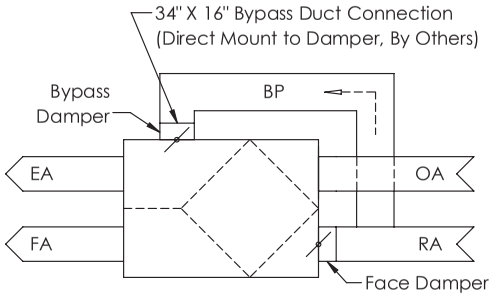

BYPASS AIRFLOW SCHEMATIC
FRONT VIEW

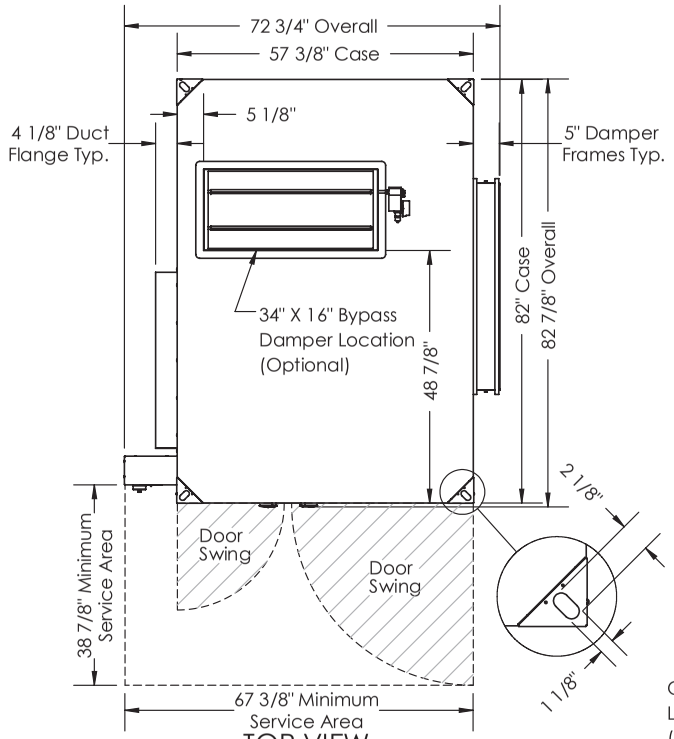

TOP VIEW

ABBREVIATIONS
EA: Exhaust Air to outside
OA: Outside Air intake
RA: Room Air to be exhausted
FA: Fresh Air to inside
BP: Bypass Air Intake

INSTALLATION ORIENTATION
Unit must be installed in orientation shown.

NOTE
1. UNLESS OTHERWISE SPECIFIED, DIMENSIONS ARE ROUNDED TO THE NEAREST EIGHTH OF AN INCH.

2. SPECIFICATIONS MAY BE SUBJECT TO CHANGE WITHOUT NOTICE.

3. MIN. DUCT CLEARANCE FROM DAMPER BLADE WHEN FULLY OPENED TO BE 2". SMACNA RULES APPLY.

4. UNITS WITH BYPASS WILL REQUIRE ADDITIONAL SPACE FOR THE CONNECTION OF THE BYPASS DUCT (BY OTHERS).

5. FOR INSTALLATION DETAILS, REFER TO I&O MANUAL SUPPLEMENT FOR BYPASS.

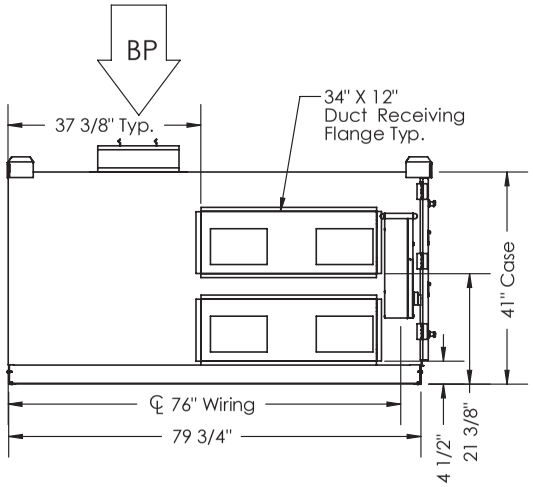

LEFT VIEW

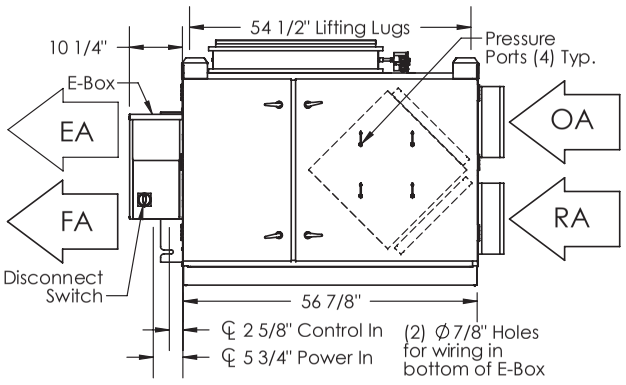

FRONT VIEW

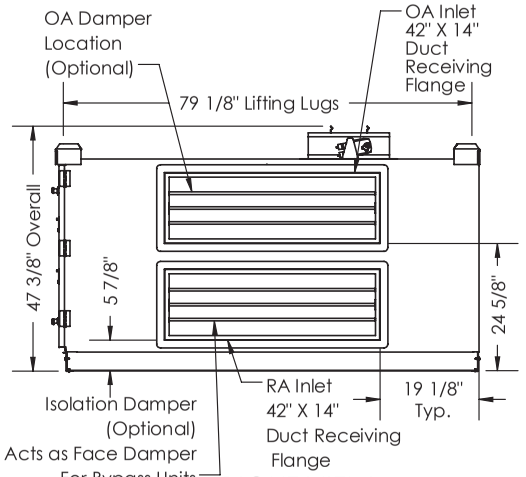

RIGHT VIEW

AIRFLOW CONFIGURATION
Available as shown in dimension drawing.

UNIT MOUNTING & APPLICATION
Must be mounted as shown. Airstreams can not be switched.

HE 4XINV

Energy Recovery Ventilator
Standard

AHRI CERTIFIED www.ahridirectory.org Globally Recognized. Industry Respected.

c UL us LISTED DUCTED HEAT RECOVERY VENTILATOR 89S5

INDOOR UNIT

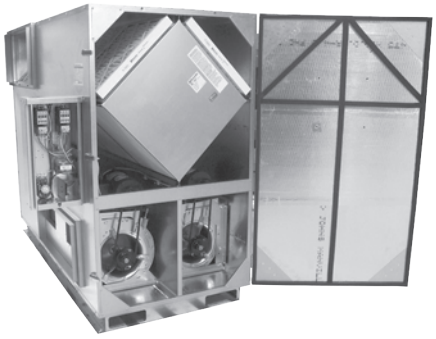

Download specification at:
renewaire.com/specifications

SPECIFICATIONS

Ventilation Type:
Static plate, heat and humidity transfer

Typical Airflow Range: 1,000-4,400 CFM

AHRI 1060 Certified Core: Four L125-G5

Standard Features:
TEFC Premium efficiency motors
Motor starters
Non-fused disconnect
24 VAC transformer/relay package
Cross-core differential pressure ports

Filters:
Total qty. 8, MERV 8: 20" x 20" x 2"

Unit Dimensions & Weight:
50 3/4" L x 81 1/2" W x 62" H
753-1,196 lbs., varies by option(s)

Max. Shipping Dimensions & Weight (on pallet):
60" L x 90" W x 70" H
1,332 lbs.

Motor(s):
Qty. 2, Belt drive blower/standard motor packages with adjustable sheaves (see table below)

Options:
Onboard variable frequency drives (VFDs) - one or both airstreams
Shaft grounding ring on motors with VFDs
Fused disconnect
Integrated programmable controls - enhanced, premium
Bypass economizer damper (see bypass DIM drawing) - dry-bulb temperature controls (standard), enthalpy controls (option)
Class 1 low leakage motorized isolation dampers - OA, RA or both airstreams
Qty. 2, Factory mounted filter alarms - both airstreams
Double wall construction
Exterior paint - white, custom colors

Accessories:
Filters - MERV 13, 2" (shipped loose)
Digital time clock - wall mount (TC7D-W), in exterior enclosure (TC7D-E)
Carbon dioxide sensor/control - wall mount (CO2-W), duct mount (CO2-D)
IAQ sensor - wall mount (IAQ-W), duct mount (IAQ-D)
Motion occupancy sensor/control - ceiling mount (MC-C), wall mount (MC-W)
Smoke Detector - duct mount (SD-D)
Electric duct heater - EK series (1–175 kW)
Indirect gas-fired duct furnace - GH series (50-400 MBH), installed downstream of any fans

AIRFLOW PERFORMANCE

Motor HP	Blower RPM	Sheave Adj. Turns Open	External Static Pressure (in. w.g.)													
			0.00		0.25		0.50		0.75		1.00		1.25		1.50	
			SCFM	BHP	SCFM	BHP	SCFM	BHP	SCFM	BHP	SCFM	BHP	SCFM	BHP	SCFM	BHP
2.0	1191	4	3330	1.4	3015	1.2	2690	1.0	1915	0.8	1085	0.6				
	1329	2	3715	1.9	3440	1.7	3100	1.5	2485	1.3	2000	1.0	1200	0.8		
	1432	0.5	4000	2.4	3740	2.2	3480	2.0	3050	1.7	2490	1.5	1900	1.2	1100	0.9
	1466	0							3200	1.9	2650	1.6	2120	1.3	1385	1.1
3.0	1462	3	4060	2.6	3810	2.4	3550	2.1	3180	1.9	2645	1.6	2075	1.3	1345	1.0
	1503	2.5	4175	2.8	3940	2.6	3700	2.4	3340	2.1	2885	1.7	2300	1.5	1600	1.2
	1586	1.5					3950	2.8	3640	2.5	3250	2.3	2745	2.0	2170	1.7
	1668	0.5							3900	3.0	3600	2.7	3155	2.4	2640	2.1
	1710	0									3750	3.0	3350	2.7	2975	2.4
5.0	1627	4	4393	3.9	4210	3.7	4050	3.6	3800	3.3	3490	3.1	3020	2.7	2385	2.4
	1731	2					4350	4.3	4150	4.1	3895	3.8	3515	3.5	3055	3.2
	1836	0							4400	5.0	4250	4.7	3970	4.4	3550	4.0

Note: Brake Horse Power (BHP) is for one blower motor package only. **Operation in this zone will likely exceed FLA limits.** **Operation in this zone outside of core airflow limits.**
Note: Airflow performance includes effect of clean, standard filter supplied with unit.

ELECTRICAL DATA

Standard Electrical Specifications							Optional Factory Installed VFD Electrical Specifications		
HP	Volts	HZ	Phase	FLA per motor	Min. Cir. Amps	Max. Overcurrent Protection Device	FLA per motor	Min. Cir. Amps	Max. Overcurrent Protection Device
2.0	120	60	Single	20.0	45.0	60			
2.0	208-230	60	Single	10.8-10.0	24.3	35	6.6-5.8	28.3	30
	208-230	60	Three	6.6-5.8	14.9	20	6.6-5.8	16.3	20
	460	60	Three	2.9	6.5	15	2.9	7.2	15
	575	60	Three	2.4	5.4	15	2.4	5.9	15
3.0	208-230	60	Single	14.7-14	33.1	40	9.4-8.5	40.2	45
	208-230	60	Three	9.4-8.5	21.1	25	9.4-8.5	23.2	25
	460	60	Three	4.2	9.5	15	4.2	10.5	15
	575	60	Three	3.3	7.4	15	3.3	8.2	15
5.0	208-230	60	Three	14.5-13.4	32.6	45	14.5-13.4	35.9	45
	460	60	Three	6.7	15.1	20	6.7	16.6	20
	575	60	Three	5.3	11.9	15	5.3	13.1	15

Specifications may be subject to change without notice.

RenewAire Energy Recovery Ventilation

HE4XINV Energy Recovery Ventilator Standard

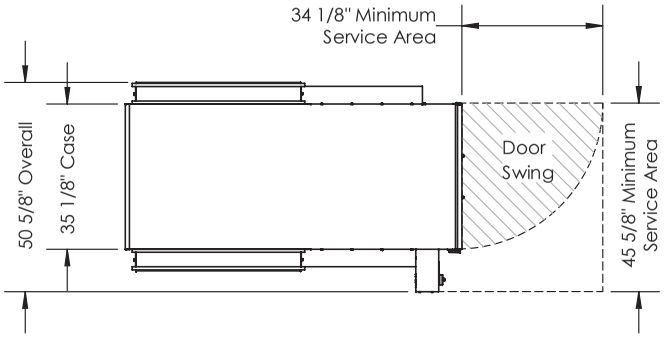

TOP VIEW

ABBREVIATIONS
EA: Exhaust Air to outside
OA: Outside Air intake
RA: Room Air to be exhausted
FA: Fresh Air to inside

INSTALLATION ORIENTATION
Unit must be installed in orientation shown.

NOTE
1. UNLESS OTHERWISE SPECIFIED, DIMENSIONS ARE ROUNDED TO THE NEAREST EIGHTH OF AN INCH.

2. SPECIFICATIONS MAY BE SUBJECT TO CHANGE WITHOUT NOTICE.

3. MIN. DUCT CLEARANCE FROM DAMPER BLADES WHEN FULLY OPENED TO BE 2". SMACNA RULES APPLY.

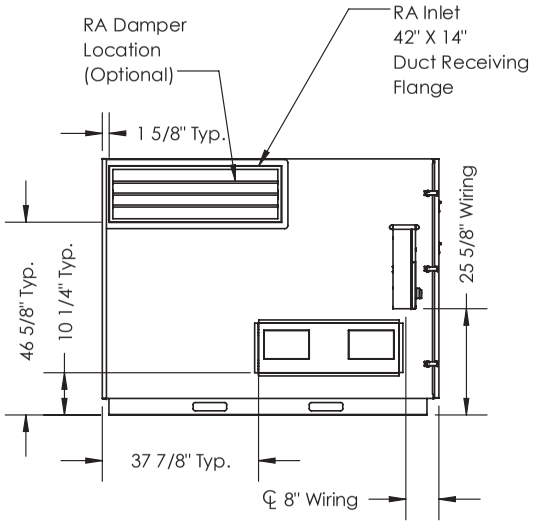

LEFT VIEW

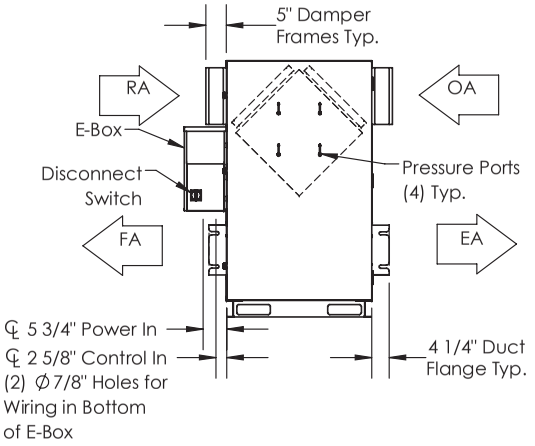

FRONT VIEW

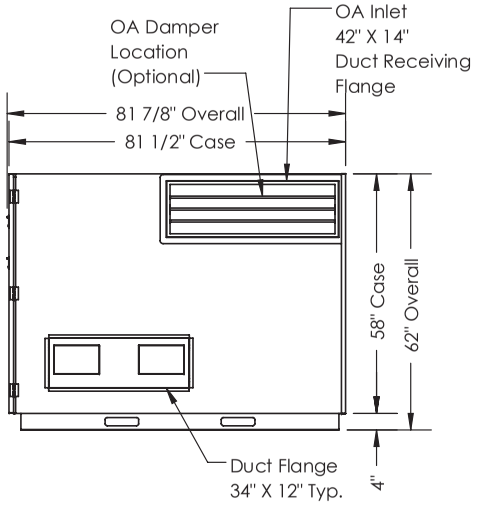

RIGHT VIEW

AIRFLOW CONFIGURATION
Available as shown in dimension drawing.

UNIT MOUNTING & APPLICATION
Must be mounted as shown. RA/EA airstream can be switched with OA/FA airstream unless certain options are selected.

HE 4XINV

Energy Recovery Ventilator
Standard with Bypass Economizer

AHRI CERTIFIED www.ahridirectory.org
Globally Recognized. Industry Respected.

c UL us LISTED DUCTED HEAT RECOVERY VENTILATOR 89S5

INDOOR UNIT

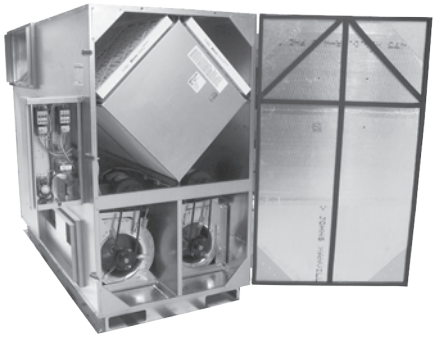

Download specification at:
renewaire.com/specifications

SPECIFICATIONS

Ventilation Type:
Static plate, heat and humidity transfer

Typical Airflow Range: 1,000-4,400 CFM

AHRI 1060 Certified Core: Four L125-G5

Standard Features:
TEFC Premium efficiency motors
Motor starters
Non-fused disconnect
24 VAC transformer/relay package
Cross-core differential pressure ports

Filters:
Total qty. 8, MERV 8: 20" x 20" x 2"

Unit Dimensions & Weight:
50 3/4" L x 81 1/2" W x 62" H
753-1,196 lbs., varies by option(s)

Max. Shipping Dimensions & Weight (on pallet):
60" L x 90" W x 70" H
1,332 lbs.

Motor(s):
Qty. 2, Belt drive blower/standard motor packages with adjustable sheaves (see table below)

Options:
Onboard variable frequency drives (VFDs) - one or both airstreams
Shaft grounding ring on motors with VFDs
Fused disconnect
Integrated programmable controls - enhanced, premium
Bypass economizer damper (see bypass DIM drawing) - dry-bulb temperature controls (standard), enthalpy controls (option)
Class 1 low leakage motorized isolation dampers - OA, RA or both airstreams
Qty. 2, Factory mounted filter alarms - both airstreams
Double wall construction
Exterior paint - white, custom colors

Accessories:
Filters - MERV 13, 2" (shipped loose)
Digital time clock - wall mount (TC7D-W), in exterior enclosure (TC7D-E)
Carbon dioxide sensor/control - wall mount (CO2-W), duct mount (CO2-D)
IAQ sensor - wall mount (IAQ-W), duct mount (IAQ-D)
Motion occupancy sensor/control - ceiling mount (MC-C), wall mount (MC-W)
Smoke Detector - duct mount (SD-D)
Electric duct heater - EK series (1–175 kW)
Indirect gas-fired duct furnace - GH series (50-400 MBH), installed downstream of any fans

AIRFLOW PERFORMANCE

Motor HP	Blower RPM	Sheave Adj. Turns Open	External Static Pressure (in. w.g.)													
			0.00		0.25		0.50		0.75		1.00		1.25		1.50	
			SCFM	BHP	SCFM	BHP	SCFM	BHP	SCFM	BHP	SCFM	BHP	SCFM	BHP	SCFM	BHP
2.0	1191	4	3330	1.4	3015	1.2	2690	1.0	1915	0.8	1085	0.6				
	1329	2	3715	1.9	3440	1.7	3100	1.5	2485	1.3	2000	1.0	1200	0.8		
	1432	0.5	4000	2.4	3740	2.2	3480	2.0	3050	1.7	2490	1.5	1900	1.2	1100	0.9
	1466	0							3200	1.9	2650	1.6	2120	1.3	1385	1.1
3.0	1462	3	4060	2.6	3810	2.4	3550	2.1	3180	1.9	2645	1.6	2075	1.3	1345	1.0
	1503	2.5	4175	2.8	3940	2.6	3700	2.4	3340	2.1	2885	1.7	2300	1.5	1600	1.2
	1586	1.5					3950	2.8	3640	2.5	3250	2.3	2745	2.0	2170	1.7
	1668	0.5							3900	3.0	3600	2.7	3155	2.4	2640	2.1
	1710	0									3750	3.0	3350	2.7	2975	2.4
5.0	1627	4	4393	3.9	4210	3.7	4050	3.6	3800	3.3	3490	3.1	3020	2.7	2385	2.4
	1731	2					4350	4.3	4150	4.1	3895	3.8	3515	3.5	3055	3.2
	1836	0							4400	5.0	4250	4.7	3970	4.4	3550	4.0

Note: Brake Horse Power (BHP) is for one blower motor package only. **Operation in this zone will likely exceed FLA limits.** **Operation in this zone outside of core airflow limits.**
Note: Airflow performance includes effect of clean, standard filter supplied with unit.

ELECTRICAL DATA

Standard Electrical Specifications							Optional Factory Installed VFD Electrical Specifications		
HP	Volts	HZ	Phase	FLA per motor	Min. Cir. Amps	Max. Overcurrent Protection Device	FLA per motor	Min. Cir. Amps	Max. Overcurrent Protection Device
2.0	120	60	Single	20.0	45.0	60			
2.0	208-230	60	Single	10.8-10.0	24.3	35	6.6-5.8	28.3	30
	208-230	60	Three	6.6-5.8	14.9	20	6.6-5.8	16.3	20
	460	60	Three	2.9	6.5	15	2.9	7.2	15
	575	60	Three	2.4	5.4	15	2.4	5.9	15
3.0	208-230	60	Single	14.7-14	33.1	40	9.4-8.5	40.2	45
	208-230	60	Three	9.4-8.5	21.1	25	9.4-8.5	23.2	25
	460	60	Three	4.2	9.5	15	4.2	10.5	15
	575	60	Three	3.3	7.4	15	3.3	8.2	15
5.0	208-230	60	Three	14.5-13.4	32.6	45	14.5-13.4	35.9	45
	460	60	Three	6.7	15.1	20	6.7	16.6	20
	575	60	Three	5.3	11.9	15	5.3	13.1	15

Specifications may be subject to change without notice.

RenewAire Energy Recovery Ventilation

HE4XINV Energy Recovery Ventilator Standard with Bypass Economizer

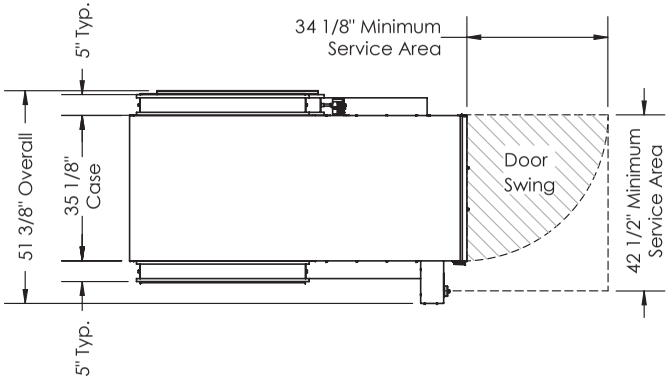

TOP VIEW

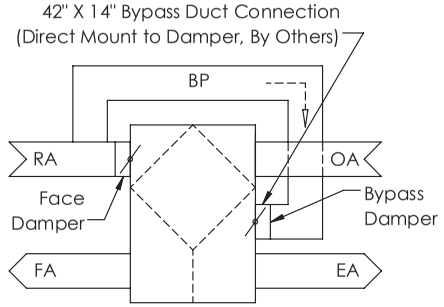

BYPASS AIRFLOW SCHEMATIC
FRONT VIEW

ABBREVIATIONS
EA: Exhaust Air to outside
OA: Outside Air intake
RA: Room Air to be exhausted
FA: Fresh Air to inside
BP: Bypass Air Intake

INSTALLATION ORIENTATION
Unit must be installed in orientation shown.

NOTE
1. UNLESS OTHERWISE SPECIFIED, DIMENSIONS ARE ROUNDED TO THE NEAREST EIGHTH OF AN INCH.

2. SPECIFICATIONS MAY BE SUBJECT TO CHANGE WITHOUT NOTICE.

3. MIN. DUCT CLEARANCE FROM DAMPER BLADE WHEN FULLY OPENED TO BE 2". SMACNA RULES APPLY.

4. UNITS WITH BYPASS WILL REQUIRE ADDITIONAL SPACE FOR THE CONNECTION OF THE BYPASS DUCT (BY OTHERS).

5. FOR INSTALLATION DETAILS, REFER TO I&O MANUAL SUPPLEMENT FOR BYPASS.

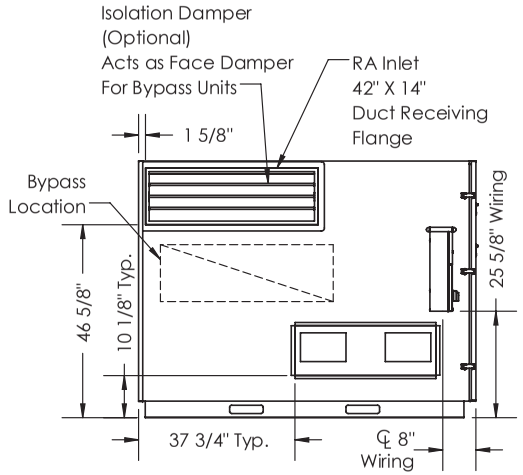

LEFT VIEW

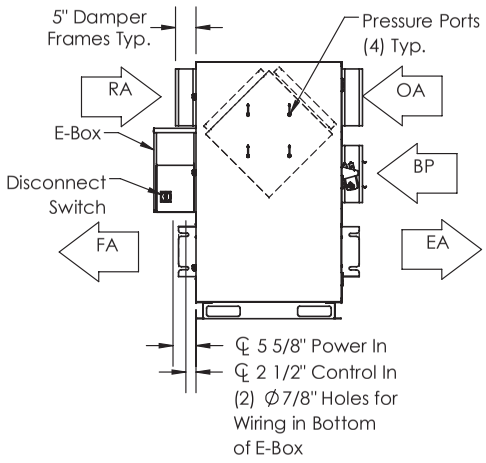

FRONT VIEW

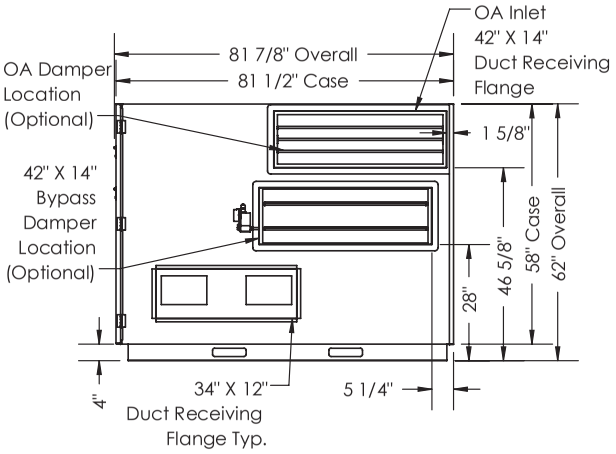

RIGHT VIEW

AIRFLOW CONFIGURATION
Available as shown in dimension drawing.

UNIT MOUNTING & APPLICATION
Must be mounted as shown. Airstreams can not be switched.

HE 4XRT

Energy Recovery Ventilator
Standard

AHRI CERTIFIED www.ahridirectory.org Globally Recognized. Industry Respected.

c UL us LISTED DUCTED HEAT RECOVERY VENTILATOR 89S5

ROOFTOP UNIT

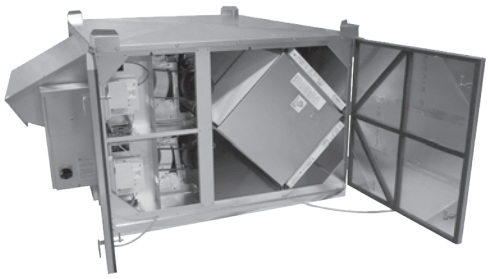

Download specification at:
renewaire.com/specifications

SPECIFICATIONS

Ventilation Type:
Static plate, heat and humidity transfer

Typical Airflow Range: 1,000-4,400 CFM

AHRI 1060 Certified Core: Four L125-G5

Standard Features:
TEFC Premium efficiency motors
Motor starters
Non-fused disconnect
24 VAC transformer/relay package
Cross-core differential pressure ports

Filters:
Total qty. 8, MERV 8: 20" x 20" x 2"

Unit Dimensions & Weight:
94" L x 83" W x 44" H
845-1,143 lbs., varies by option(s)

Max. Shipping Dimensions & Weight (on pallet):
80" L x 90" W x 67" H
1,279 lbs.

Motor(s):
Qty. 2, Belt drive blower/standard motor packages with adjustable sheaves (see table below)

Options:
Onboard variable frequency drives (VFDs) - one or both airstreams
Shaft grounding ring on motors with VFDs
Fused disconnect
Integrated programmable controls - enhanced, premium
Class 1 low leakage motorized isolation dampers - OA, RA or both airstreams
Qty. 2, Factory mounted filter alarms - both airstreams
Double wall construction
Exterior paint - white, custom colors

Accessories:
Filters - MERV 13, 2" (shipped loose)
Roof curb - standard 14"
Curb wind clip
Engineered combo curb for Carrier RTU
Engineered combo curb for Trane RTU
Digital time clock - wall mount (TC7D-W), in exterior enclosure (TC7D-E)
Carbon dioxide sensor/control - wall mount (CO2-W), duct mount (CO2-D)
IAQ sensor - wall mount (IAQ-W), duct mount (IAQ-D)
Motion occupancy sensor/control - ceiling mount (MC-C), wall mount (MC-W)
Smoke Detector - duct mount (SD-D)
Electric duct heater - EK series (1–175 kW)); designed for indoor ductwork installation only
Indirect gas-fired duct furnace - GH series (50-400 MBH), installed downstream of any fans

AIRFLOW PERFORMANCE

Motor HP	Blower RPM	Sheave Adj. Turns Open	External Static Pressure (in. w.g.)													
			0.00		0.25		0.50		0.75		1.00		1.25		1.50	
			SCFM	BHP	SCFM	BHP	SCFM	BHP	SCFM	BHP	SCFM	BHP	SCFM	BHP	SCFM	BHP
2.0	1186	4	3099	1.5	2790	1.3	2295	1.1	1790	0.8	1150	0.6				
	1326	2	3465	2.2	3185	1.9	2810	1.7	2335	1.4	1885	1.2	1290	0.9		
	1466	0									2451	1.8	2026	1.5	1485	1.2
3.0	1455	4	3812	2.7	3550	2.5	3285	2.3	2820	2.0	2400	1.7	1970	1.5	1450	1.2
	1527	3			3750	2.9	3500	2.7	3085	2.4	2676	2.1	2300	1.9	1815	1.5
	1598	2							3350	2.6	2950	2.6	2590	2.3	2175	2.0
	1670	1									3210	3.0	2870	2.7	2500	2.4
	1742	0													2800	2.9
5.0	1623	4	4165	3.7	3965	3.5	3750	3.3	3475	3.0	3055	2.5	2685	2.3	2290	2.0
	1728	2			4240	4.3	4050	4.0	3820	3.7	3450	3.3	3050	3.0	2720	2.6
	1832	0					4345	4.9	4140	4.5	3850	4.2	3490	3.7	3145	3.3

Note: Brake Horse Power (BHP) is for one blower motor package only. **Operation in this zone will likely exceed FLA limits.** **Operation in this zone outside of core airflow limits.**
Note: Airflow performance includes effect of clean, standard filter supplied with unit.

ELECTRICAL DATA

Standard Electrical Specifications							Optional Factory Installed VFD Electrical Specifications		
HP	Volts	HZ	Phase	FLA per motor	Min. Cir. Amps	Max. Overcurrent Protection Device	FLA per motor	Min. Cir. Amps	Max. Overcurrent Protection Device
2.0	120	60	Single	20.0	45.0	60			
2.0	208-230	60	Single	10.8-10.0	24.3	35	6.6-5.8	28.3	30
	208-230	60	Three	6.6-5.8	14.9	20	6.6-5.8	16.3	20
	460	60	Three	2.9	6.5	15	2.9	7.2	15
	575	60	Three	2.4	5.4	15	2.4	5.9	15
3.0	208-230	60	Single	14.7-14	33.1	40	9.4-8.5	40.2	45
	208-230	60	Three	9.4-8.5	21.1	25	9.4-8.5	23.2	25
	460	60	Three	4.2	9.5	15	4.24	10.5	15
	575	60	Three	3.3	7.4	15	3.3	8.2	15
5.0	208-230	60	Three	14.5-13.4	32.6	45	14.5-13.4	35.9	45
	460	60	Three	6.7	15.1	20	6.7	16.6	20
	575	60	Three	5.3	11.9	15	5.3	13.1	15

Specifications may be subject to change without notice.

RenewAire Energy Recovery Ventilation

HE4XRT (RTV/RTR) Energy Recovery Ventilator Standard

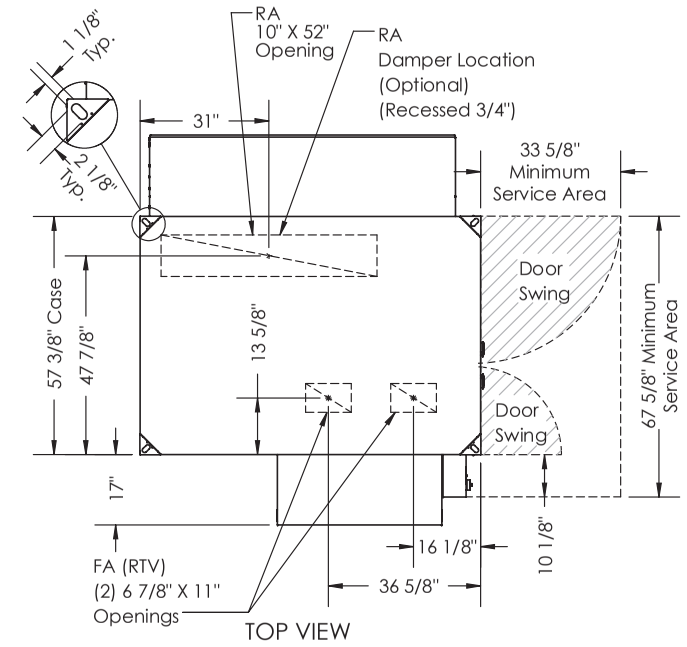

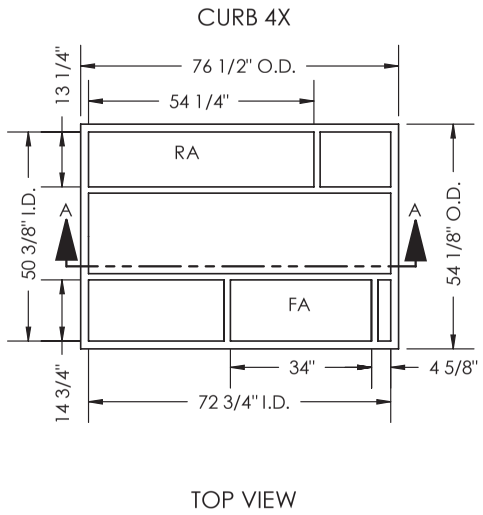

ABBREVIATIONS
EA: Exhaust Air to outside
OA: Outside Air intake
RA: Room Air to be exhausted
FA: Fresh Air to inside
RTV: Rooftop Vertical RA & FA
RTR: Rooftop Vertical RA Only

INSTALLATION ORIENTATION
Unit must be installed in orientation shown.

NOTE:
1. UNLESS OTHERWISE SPECIFIED, DIMENSIONS ARE ROUNDED TO THE NEAREST EIGHTH OF AN INCH.

2. SPECIFICATIONS MAY BE SUBJECT TO CHANGE WITHOUT NOTICE.

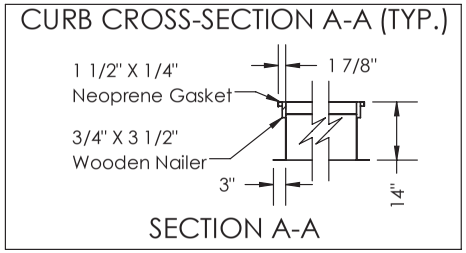

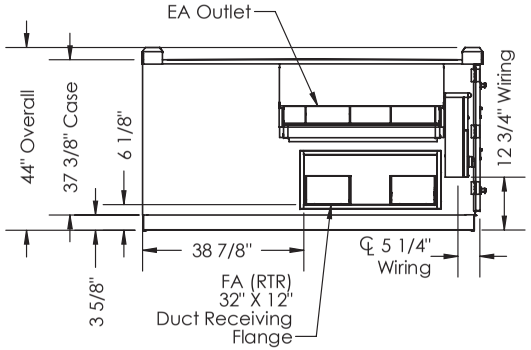

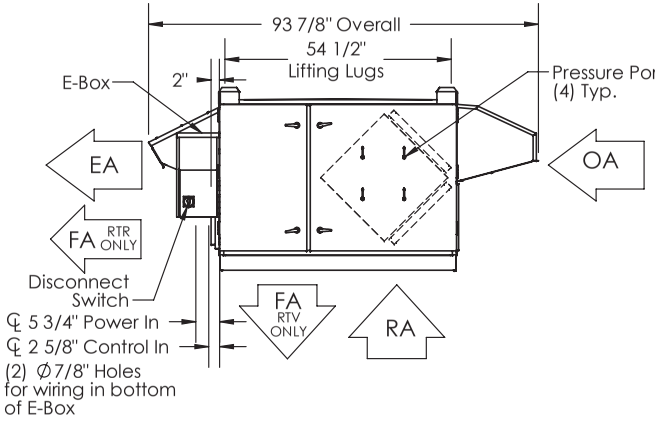

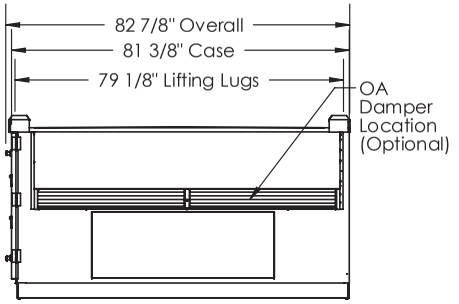

AIRFLOW CONFIGURATION

Available as shown:

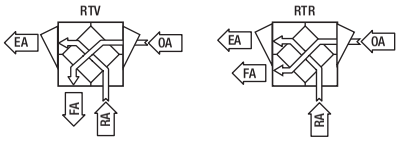

UNIT MOUNTING & APPLICATION

Must be mounted as shown. Airstreams can not be switched.

HE4XRT (RTH/RTF) Energy Recovery Ventilator Standard

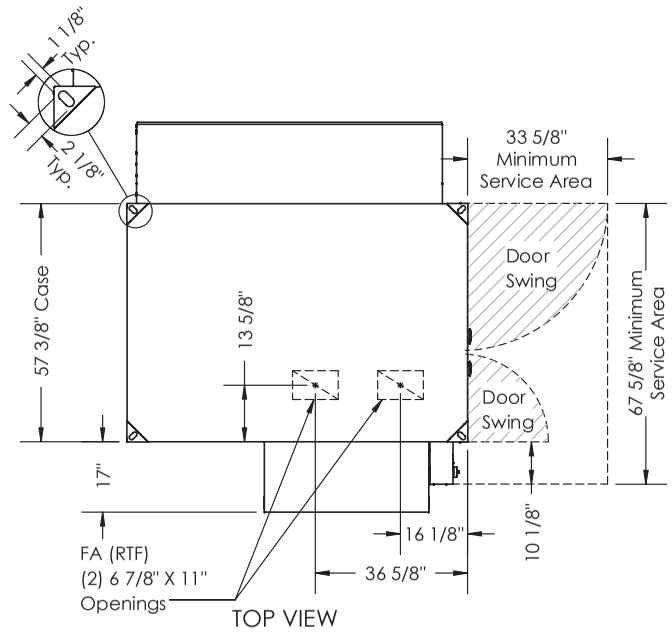

TOP VIEW

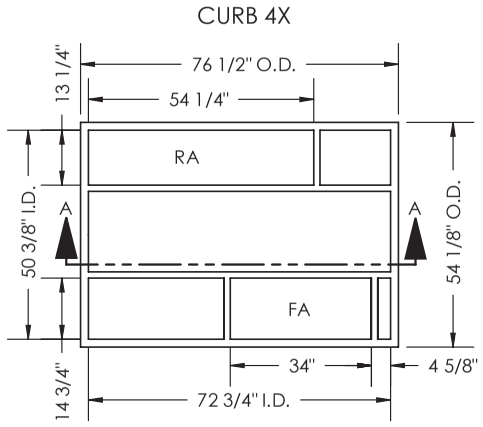

TOP VIEW

ABBREVIATIONS
EA: Exhaust Air to outside
OA: Outside Air intake
RA: Room Air to be exhausted
FA: Fresh Air to inside
RTF: Rooftop Vertical FA Only
RTH: Rooftop Horizontal RA & FA

INSTALLATION ORIENTATION
Unit must be installed in orientation shown.

NOTE:
1. UNLESS OTHERWISE SPECIFIED, DIMENSIONS ARE ROUNDED TO THE NEAREST EIGHTH OF AN INCH.

2. SPECIFICATIONS MAY BE SUBJECT TO CHANGE WITHOUT NOTICE.

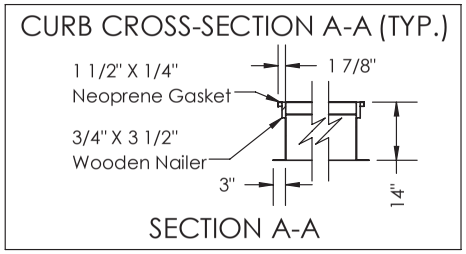

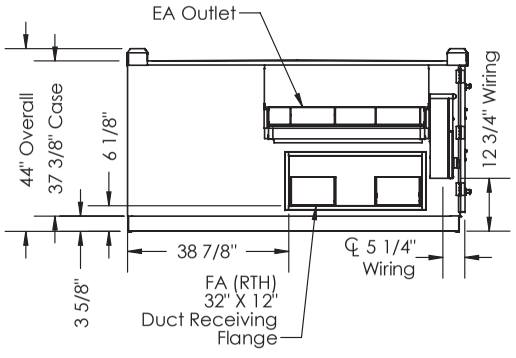

LEFT VIEW

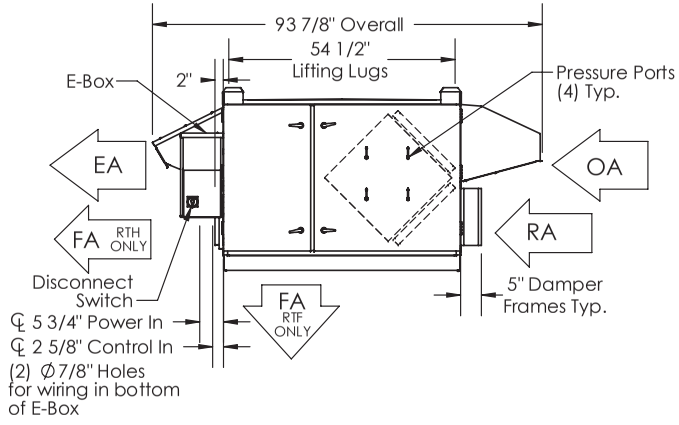

FRONT VIEW

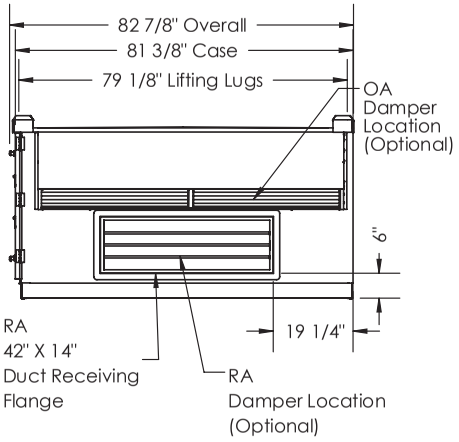

RIGHT VIEW

AIRFLOW CONFIGURATION

Available as shown:

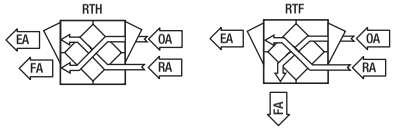

UNIT MOUNTING & APPLICATION

Must be mounted as shown. Airstreams can not be switched.

RenewAire Energy Recovery Ventilation

THIS PAGE IS INTENTIONALLY LEFT BLANK.

HE 4XRTC

Energy Recovery Ventilator
Standard

AHRI CERTIFIED www.ahridirectory.org Globally Recognized. Industry Respected.

c UL us LISTED DUCTED HEAT RECOVERY VENTILATOR 89S5

ROOFTOP UNIT
Direct Connect

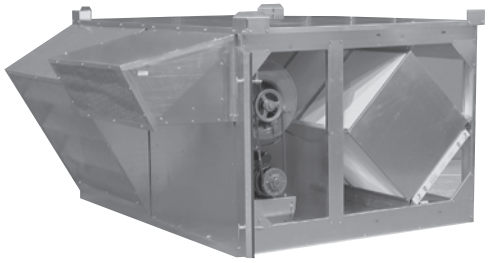

Download specification at:
renewaire.com/specifications

SPECIFICATIONS

Ventilation Type:
Static plate, heat and humidity transfer

Typical Airflow Range: 2,500-3,900 CFM

AHRI 1060 Certified Core: Four L125-G5

Standard Features:
TEFC Premium efficiency motors
Motor starters
Non-fused disconnect
24 VAC transformer/relay package
Cross-core differential pressure ports

Filters:
Total qty. 8, MERV 8: (4) 20" x 20" x 2" and (4) 16" x 20" x 2"

Unit Dimensions & Weight:
81 1/4" L x 83 1/4" W x 48 1/4" H
887-1,169 lbs., varies by option(s)

Max. Shipping Dimensions & Weight (on pallet):
80" L x 90" W x 80" H
1,300 lbs.

Motor(s):
Qty. 2, 5.0 HP ea., Belt drive blower/standard motor packages with adjustable sheaves

Options:
Onboard variable frequency drives (VFDs) - one or both airstreams
Shaft grounding ring on motors with VFDs
Fused disconnect
Integrated programmable controls - enhanced, premium
Qty. 2, Factory mounted filter alarms - both airstreams
Double wall construction
Exterior paint - white, custom colors

Accessories:
Filters - MERV 13, 2" (shipped loose)
RTC transition kit - for vertical RTU, for horizontal RTU
Rooftop RTC transition paint - white, custom colors
Digital time clock - wall mount (TC7D-W), in exterior enclosure (TC7D-E)
Carbon dioxide sensor/control - wall mount (CO2-W), duct mount (CO2-D)
IAQ sensor - wall mount (IAQ-W), duct mount (IAQ-D)
Motion occupancy sensor/control - ceiling mount (MC-C), wall mount (MC-W)
Smoke Detector - duct mount (SD-D)

Note: Electric Duct Heater and Indirect Gas-Fired Duct Furnace are not available on RTC units.

AIRFLOW PERFORMANCE

	Blower RPM Nominal	Sheave Adj. Turns Open	Tie-In Directly to Rooftop A/C Unit* — Static Pressure in Adjacent Air Handler (Inches Water Column)						Unit Ducted Independently* — External Static Pressure (Inches Water Column)							
			-0.75		-0.5		-0.25		0.0		+0.25		+0.5		+0.75	
			CFM	BHP	CFM	BHP	CFM	BHP	CFM	BHP	CFM	BHP	CFM	BHP	CFM	BHP
Exhaust Air	1510	0	3400	3.1	3700	3.3	4000	3.6	4250	4.1	4000	3.6	3700	3.3	3400	3.1
	1465	1	3275	3.0	3600	3.2	3925	3.4	4225	3.8	3925	3.4	3600	3.2	3275	3.0
	1420	2	3125	2.8	3450	2.9	3775	3.0	4156	3.6	3775	3.0	3450	2.9	3125	2.8
	1375	3	2935	2.3	3300	2.5	3665	2.8	4067	3.4	3665	2.8	3300	2.5	2935	2.3
	1330	4	2780	2.0	3150	2.3	3520	2.5	3900	3.1	3520	2.5	3150	2.3	2780	2.0
	1285	5	2685	1.6	3050	2.0	3415	2.4	3760	2.8	3415	2.4	3050	2.0	2685	1.6
	1240	6	2620	1.4	2950	1.7	3280	2.0	3600	2.4	3280	2.0	2950	1.7	2620	1.4
Fresh Air	1825	0													3245	5.0
	1770	1											3225	4.9	3125	4.6
	1715	2							3450	4.8	3275	4.6	3140	4.5	3005	4.3
	1660	3	3920	5.0	3760	5.0	3600	5.0	3360	4.5	3180	4.1	3060	4.0	2940	3.9
	1605	4	3790	4.6	3670	4.6	3550	4.7	3270	4.1	3090	3.7	2970	3.7	2850	3.7
	1550	5	3724	4.2	3582	4.3	3440	4.5	3190	3.6	3010	3.4	2890	3.3	2770	3.3
	1495	6	3680	4.2	3500	4.1	3320	3.9	3100	3.5	2910	2.9	2790	2.8	2670	2.8

Note: Brake Horse Power (BHP) is for one blower motor package only. **Operation in this zone will likely exceed FLA limits.**

Note: Airflow performance includes effect of clean, standard filter supplied with unit.

* See page 38 for installation details.

ELECTRICAL DATA

Standard Electrical Specifications							Optional Factory Installed VFD Electrical Specifications		
HP	Volts	HZ	Phase	FLA per motor	Min. Cir. Amps	Max. Overcurrent Protection Device	FLA per motor	Min. Cir. Amps	Max. Overcurrent Protection Device
5.0	208-230	60	Three	14.5-13.4	32.6	45	14.5-13.4	35.9	45
	460	60	Three	6.7	15.1	20	6.7	16.6	20
	575	60	Three	5.3	11.9	15	5.3	13.1	15

Specifications may be subject to change without notice.

RenewAire Energy Recovery Ventilation

HE4XRTC Energy Recovery Ventilator Standard

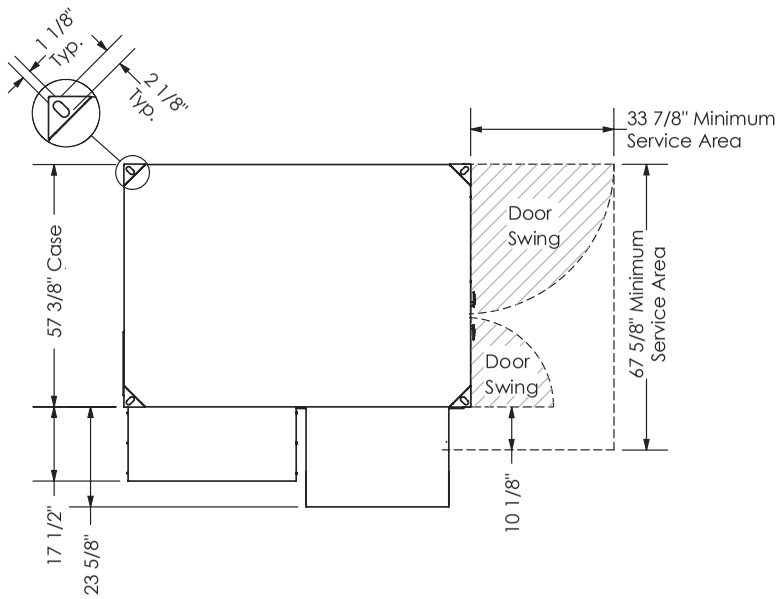

TOP VIEW

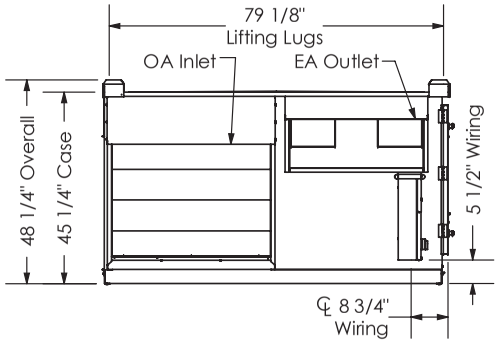

LEFT VIEW

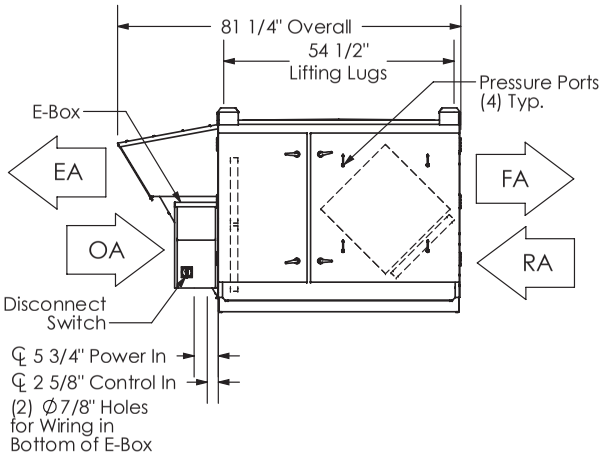

FRONT VIEW

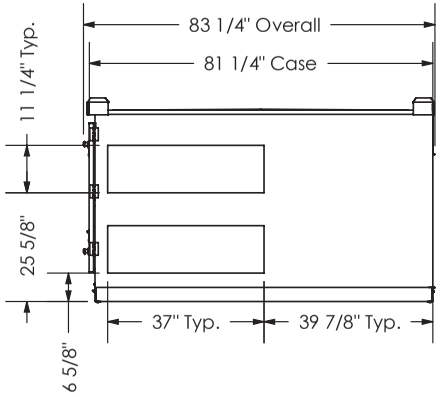

RIGHT VIEW

ABBREVIATIONS
EA: Exhaust Air to outside
OA: Outside Air intake
RA: Room Air to be exhausted
FA: Fresh Air to inside

INSTALLATION ORIENTATION
Unit must be installed in orientation shown.

NOTE:
1. UNLESS OTHERWISE SPECIFIED, DIMENSIONS ARE ROUNDED TO THE NEAREST EIGHTH OF AN INCH.

2. SPECIFICATIONS MAY BE SUBJECT TO CHANGE WITHOUT NOTICE.

AIRFLOW CONFIGURATION
Available as shown in dimension drawing.

UNIT MOUNTING & APPLICATION
Must be mounted as shown. Airstreams can not be switched.

HE 6XIN

Energy Recovery Ventilator
Standard

For safety listed products, see LE-SERIES models.

INDOOR UNIT

Download specification at:
renewaire.com/specifications

SPECIFICATIONS

Ventilation Type:
Static plate, heat and humidity transfer

Typical Airflow Range: 1,500-6,500 CFM

AHRI 1060 Certified Core:
Six L125-G5

Standard Features:
TEFC Premium efficiency motors
Motor starters
Non-fused disconnect
24 VAC transformer/relay package
Cross-core differential pressure ports

Filters:
Total qty. 12, MERV 8: 20" x 20" x 2"

Unit Dimensions & Weight:
88" L x 113 1/2" W x 81 3/4" H
2,235-3,099 lbs., varies by option(s)

Max. Shipping Dimensions & Weight (on pallet):
116" L x 90" W x 90" H
3,439 lbs.

Motor(s):
Qty. 2, Belt drive blower/standard motor packages with adjustable sheaves (see table below)

Options:
Onboard variable frequency drives (VFDs) - one or both airstreams
Shaft grounding ring on motors with VFDs
Fused disconnect
Integrated programmable controls - enhanced, premium
Bypass economizer damper (see bypass DIM drawing) - dry-bulb temperature controls (standard), enthalpy controls (option)
Class 1 low leakage motorized isolation dampers - OA, EA or both airstreams
Qty. 2, Factory mounted filter alarms - both airstreams
Double wall construction
Exterior paint - white, custom colors

Accessories:
Filters - MERV 13, 2" (shipped loose)
Digital time clock - wall mount (TC7D-W), in exterior enclosure (TC7D-E)
Carbon dioxide sensor/control - wall mount (CO2-W), duct mount (CO2-D)
IAQ sensor - wall mount (IAQ-W), duct mount (IAQ-D)
Motion occupancy sensor/control - ceiling mount (MC-C), wall mount (MC-W)
Smoke Detector - duct mount (SD-D)
Electric duct heater - EK series (1–175 kW)
Indirect gas-fired duct furnace - GH series (50-400 MBH), installed downstream of any fans

AIRFLOW PERFORMANCE

Motor HP	Blower RPM	Sheave Adj. Turns Open	External Static Pressure (in. w.g.)																	
			0.00		0.25		0.50		0.75		1.00		1.25		1.50		1.75		2.00	
			CFM	BHP	CFM	BHP	CFM	BHP	CFM	BHP	CFM	BHP	CFM	BHP	CFM	BHP	CFM	BHP	CFM	BHP
5.0	1460	4.5	5005	3.2	4800	3.2	4650	3.1	4475	3.0	4200	2.9	4000	2.8	3750	2.8	3400	2.7	3100	2.5
	1610	2	5550	4.2	5375	4.2	5250	4.1	5100	4.1	4900	4.0	4650	3.9	4500	3.8	4250	3.7	4000	3.6
	1725	0							5525	5.0	5475	5.0	5200	4.9	5050	4.8	4800	4.6	4600	4.5
7.5	1560	4.5	5275	3.7	5200	3.6	4900	3.5	4775	3.5	4550	3.4	4350	3.3	4125	3.3	3875	3.2	3575	3.1
	1740	2	5950	5.0	5825	5.0	5625	4.9	5490	4.9	5325	4.8	5125	4.7	4950	4.7	4750	4.6	4525	4.5
	1865	0	6500	6.5	6350	6.5	6225	6.4	6125	6.4	5910	6.3	5825	6.2	5625	6.1	5410	6.1	5300	6.0

Note: Brake Horse Power (BHP) is for one blower motor package only. **Operation in this zone will likely exceed FLA limits.**

Note: Airflow performance includes effect of clean, standard filter supplied with unit.

ELECTRICAL DATA

Standard Electrical Specifications							Optional Factory Installed VFD Electrical Specifications		
HP	Volts	HZ	Phase	FLA per motor	Min. Cir. Amps	Max. Overcurrent Protection Device	FLA per motor	Min. Cir. Amps	Max. Overcurrent Protection Device
5.0	208-230	60	Three	14.5-13.4	32.6	45	14.5-13.4	35.9	45
	460	60	Three	6.7	15.1	20	6.7	16.6	20
	575	60	Three	5.3	11.9	15	5.3	13.1	15
7.5	208-230	60	Three	21.0-19.0	47.3	60	21.0-19.0	52.0	60
	460	60	Three	9.5	21.4	25	9.5	23.5	25
	575	60	Three	7.6	17.1	20	7.6	18.8	20

Specifications may be subject to change without notice.

HE6XIN Energy Recovery Ventilator Standard

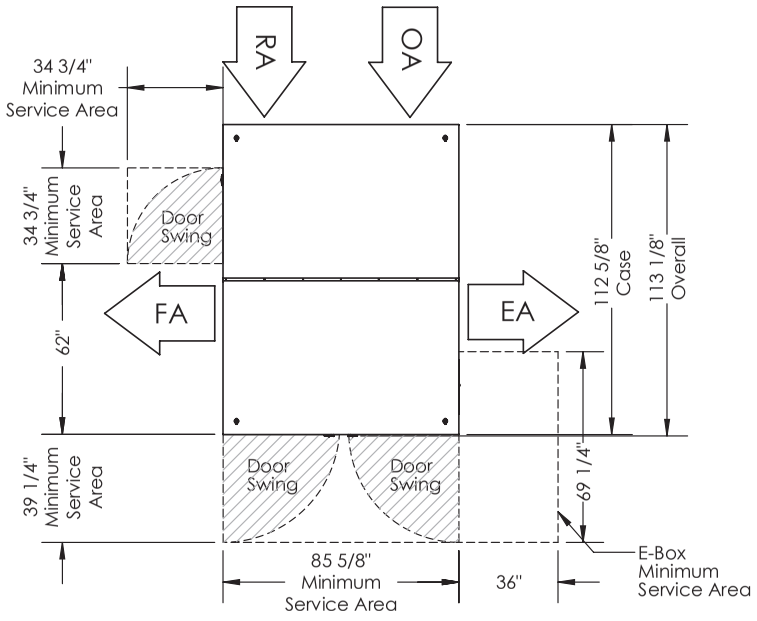

TOP VIEW

ABBREVIATIONS
EA: Exhaust Air to outside
OA: Outside Air intake
RA: Room Air to be exhausted
FA: Fresh Air to inside

INSTALLATION ORIENTATION
Unit must be installed in orientation shown.

NOTE
1.ALL UNITS HAVE INTERNAL EA BACKDRAFT DAMPER. UNLESS AN EA MOTORIZED ISOLATION DAMPER IS SPECIFIED.

2.UNLESS OTHERWISE SPECIFIED, DIMENSIONS ARE ROUNDED TO THE NEAREST EIGHTH OF AN INCH.

3.SPECIFICATIONS MAY BE SUBJECT TO CHANGE WITHOUT NOTICE.

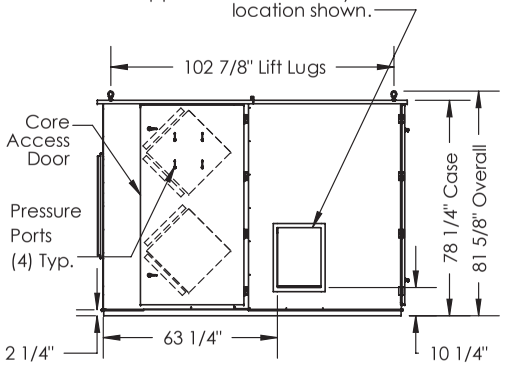

LEFT VIEW

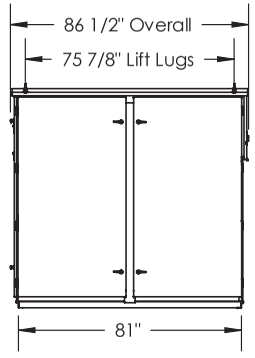

FRONT VIEW

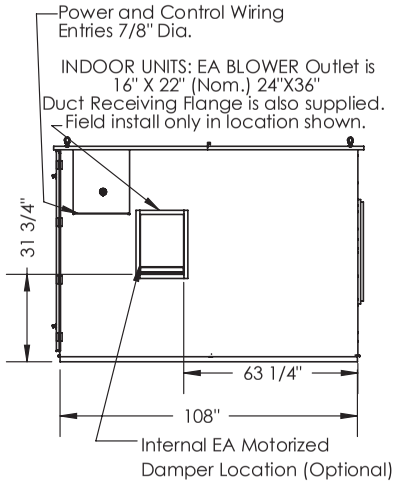

RIGHT VIEW

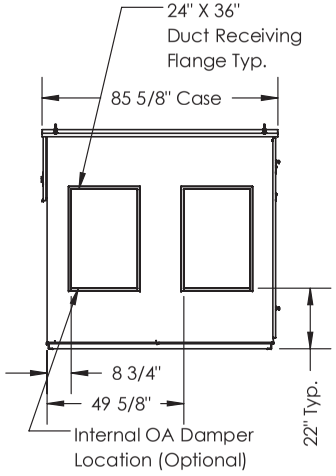

BACK VIEW

AIRFLOW CONFIGURATION
Available as shown in dimension drawing.

UNIT MOUNTING & APPLICATION
Must be mounted as shown. Airstreams can not be switched.

HE 6XIN

Energy Recovery Ventilator
Standard with Bypass Economizer

AHRI CERTIFIED® www.ahridirectory.org
Globally Recognized. Industry Respected.

For safety listed products, see LE-SERIES models.

INDOOR UNIT

Download specification at:
renewaire.com/specifications

SPECIFICATIONS

Ventilation Type:
Static plate, heat and humidity transfer

Typical Airflow Range: 1,500-6,500 CFM

AHRI 1060 Certified Core:
Six L125-G5

Standard Features:
TEFC Premium efficiency motors
Motor starters
Non-fused disconnect
24 VAC transformer/relay package
Cross-core differential pressure ports

Filters:
Total qty. 12, MERV 8: 20" x 20" x 2"

Unit Dimensions & Weight:
88" L x 113 1/2" W x 81 3/4" H
2,235-3,099 lbs., varies by option(s)

Max. Shipping Dimensions & Weight (on pallet):
116" L x 90" W x 90" H
3,439 lbs.

Motor(s):
Qty. 2, Belt drive blower/standard motor packages with adjustable sheaves (see table below)

Options:
Onboard variable frequency drives (VFDs) - one or both airstreams
Shaft grounding ring on motors with VFDs
Fused disconnect
Integrated programmable controls - enhanced, premium
Bypass economizer damper (see bypass DIM drawing) - dry-bulb temperature controls (standard), enthalpy controls (option)
Class 1 low leakage motorized isolation dampers - OA, EA or both airstreams
Qty. 2, Factory mounted filter alarms - both airstreams
Double wall construction
Exterior paint - white, custom colors

Accessories:
Filters - MERV 13, 2" (shipped loose)
Digital time clock - wall mount (TC7D-W), in exterior enclosure (TC7D-E)
Carbon dioxide sensor/control - wall mount (CO2-W), duct mount (CO2-D)
IAQ sensor - wall mount (IAQ-W), duct mount (IAQ-D)
Motion occupancy sensor/control - ceiling mount (MC-C), wall mount (MC-W)
Smoke Detector - duct mount (SD-D)
Electric duct heater - EK series (1–175 kW)
Indirect gas-fired duct furnace - GH series (50-400 MBH), installed downstream of any fans

AIRFLOW PERFORMANCE

Motor HP	Blower RPM	Sheave Adj. Turns Open	External Static Pressure (in. w.g.)																	
			0.00		0.25		0.50		0.75		1.00		1.25		1.50		1.75		2.00	
			CFM	BHP	CFM	BHP	CFM	BHP	CFM	BHP	CFM	BHP	CFM	BHP	CFM	BHP	CFM	BHP	CFM	BHP
5.0	1460	4.5	5005	3.2	4800	3.2	4650	3.1	4475	3.0	4200	2.9	4000	2.8	3750	2.8	3400	2.7	3100	2.5
	1610	2	5550	4.2	5375	4.2	5250	4.1	5100	4.1	4900	4.0	4650	3.9	4500	3.8	4250	3.7	4000	3.6
	1725	0							5525	5.0	5475	5.0	5200	4.9	5050	4.8	4800	4.6	4600	4.5
7.5	1560	4.5	5275	3.7	5200	3.6	4900	3.5	4775	3.5	4550	3.4	4350	3.3	4125	3.3	3875	3.2	3575	3.1
	1740	2	5950	5.0	5825	5.0	5625	4.9	5490	4.9	5325	4.8	5125	4.7	4950	4.7	4750	4.6	4525	4.5
	1865	0	6500	6.5	6350	6.5	6225	6.4	6125	6.4	5910	6.3	5825	6.2	5625	6.1	5410	6.1	5300	6.0

Note: Brake Horse Power (BHP) is for one blower motor package only. **Operation in this zone will likely exceed FLA limits.**

Note: Airflow performance includes effect of clean, standard filter supplied with unit.

ELECTRICAL DATA

Standard Electrical Specifications							Optional Factory Installed VFD Electrical Specifications		
HP	Volts	HZ	Phase	FLA per motor	Min. Cir. Amps	Max. Overcurrent Protection Device	FLA per motor	Min. Cir. Amps	Max. Overcurrent Protection Device
5.0	208-230	60	Three	14.5-13.4	32.6	45	14.5-13.4	35.9	45
	460	60	Three	6.7	15.1	20	6.7	16.6	20
	575	60	Three	5.3	11.9	15	5.3	13.1	15
7.5	208-230	60	Three	21.0-19.0	47.3	60	21.0-19.0	52.0	60
	460	60	Three	9.5	21.4	25	9.5	23.5	25
	575	60	Three	7.6	17.1	20	7.6	18.8	20

Specifications may be subject to change without notice.

RenewAire® Energy Recovery Ventilation

HE6XIN Energy Recovery Ventilator Standard with Bypass Economizer

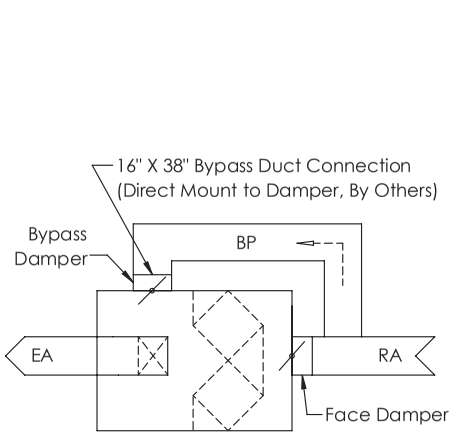

BYPASS AIRFLOW SCHEMATIC
RIGHT VIEW
(OA/FA Airstream Not Shown)

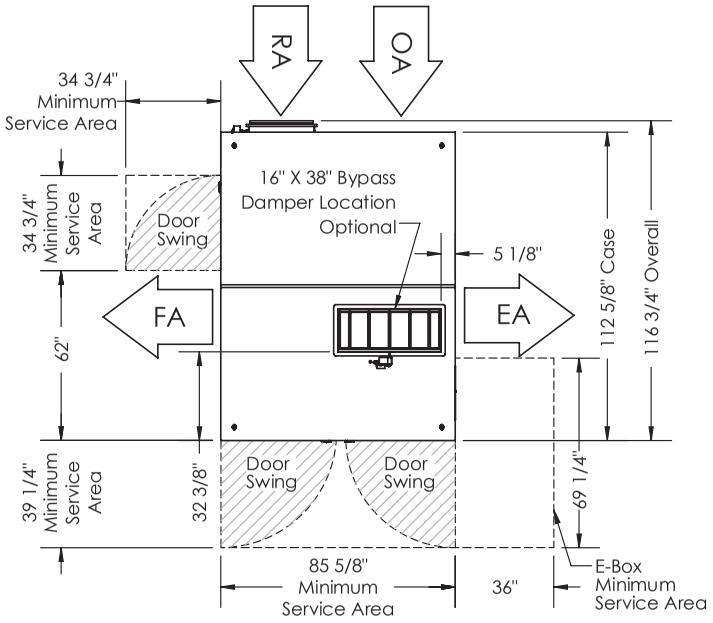

TOP VIEW

ABBREVIATIONS
EA: Exhaust Air to outside
OA: Outside Air intake
RA: Room Air to be exhausted
FA: Fresh Air to inside
BP: Bypass Air Intake

INSTALLATION ORIENTATION
Unit must be installed in orientation shown.

NOTE
1.ALL UNITS HAVE INTERNAL EA BACKDRAFT DAMPER. UNLESS AN EA MOTORIZED ISOLATION DAMPER IS SPECIFIED.

2.UNLESS OTHERWISE SPECIFIED, DIMENSIONS ARE ROUNDED TO THE NEAREST EIGHTH OF AN INCH.

3.SPECIFICATIONS MAY BE SUBJECT TO CHANGE WITHOUT NOTICE.

4. DAMPER SWINGS IN DIRECTION OF AIRFLOW. MIN. DUCT CLEARANCE FROM DAMPER BLADE WHEN FULLY OPENED TO BE 2". SMACNA RULES APPLY.

5. UNITS WITH BYPASS WILL REQUIRE ADDITIONAL SPACE FOR THE CONNECTION OF THE BYPASS DUCT (BY OTHERS).

6. FOR INSTALLATION DETAILS, REFER TO I&O MANUAL SUPPLEMENT FOR BYPASS.

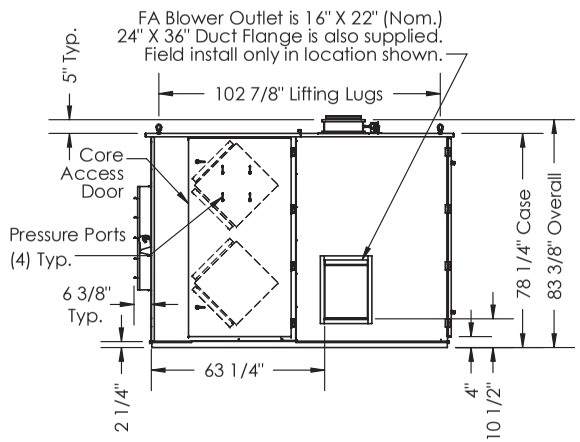

LEFT VIEW

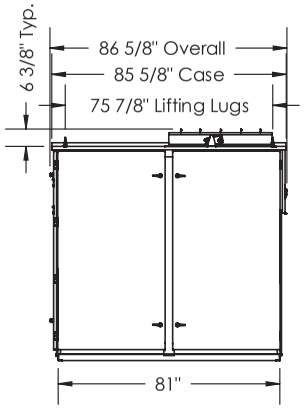

FRONT VIEW

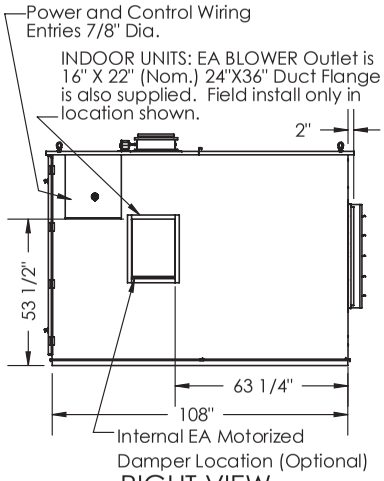

RIGHT VIEW

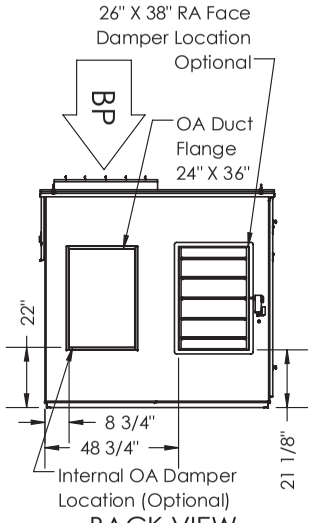

BACK VIEW

AIRFLOW CONFIGURATION
Available as shown in dimension drawing.

UNIT MOUNTING & APPLICATION
Must be mounted as shown. Airstreams can not be switched.

HE 6XRT

Energy Recovery Ventilator
Standard

AHRI CERTIFIED® www.ahridirectory.org
Globally Recognized. Industry Respected.

For safety listed products, see LE-SERIES models.

ROOFTOP UNIT

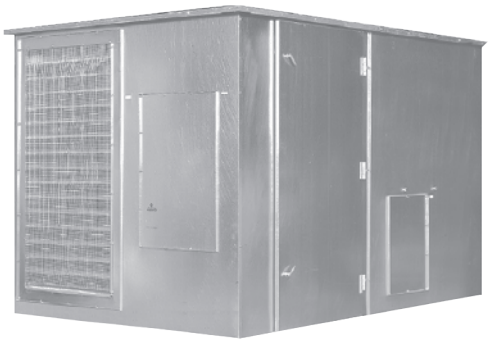

Download specification at:
renewaire.com/specifications

SPECIFICATIONS

Ventilation Type:
Static plate, heat and humidity transfer

Typical Airflow Range: 1,500-6,500 CFM

AHRI 1060 Certified Core:
Six L125-G5

Standard Features:
TEFC Premium efficiency motors
Motor starters
Non-fused disconnect
24 VAC transformer/relay package
Cross-core differential pressure ports

Filters:
Total qty. 12, MERV 8: 20" x 20" x 2"

Unit Dimensions & Weight:
106 1/2" L x 113 1/2" W x 81 3/4" H
2,301-3,166 lbs., varies by option(s)

Max. Shipping Dimensions & Weight (on pallet):
116" L x 90" W x 90" H
3,599 lbs.

Motor(s):
Qty. 2, Belt drive blower/standard motor packages with adjustable sheaves (see table below)

Options:
Onboard variable frequency drives (VFDs) - one or both airstreams
Shaft grounding ring on motors with VFDs
Fused disconnect
Integrated programmable controls - enhanced, premium
Class 1 low leakage motorized isolation dampers - OA, EA or both airstreams
Qty. 2, Factory mounted filter alarms - both airstreams
Double wall construction
Exterior paint - white, custom colors

Accessories:
Filters - MERV 13, 2" (shipped loose)
Roof curb - standard 14"
Curb wind clip
Engineered combo curb for Carrier RTU
Engineered combo curb for Trane RTU
Digital time clock - wall mount (TC7D-W), in exterior enclosure (TC7D-E)
Carbon dioxide sensor/control - wall mount (CO2-W), duct mount (CO2-D)
IAQ sensor - wall mount (IAQ-W), duct mount (IAQ-D)
Motion occupancy sensor/control - ceiling mount (MC-C), wall mount (MC-W)
Smoke Detector - duct mount (SD-D)
Electric duct heater - EK series (1–175 kW); designed for indoor ductwork installation only
Indirect gas-fired duct furnace - GH series (50-400 MBH), installed downstream of any fans

AIRFLOW PERFORMANCE

Motor HP	Blower RPM	Sheave Adj. Turns Open	External Static Pressure (in. w.g.)																	
			0.00		0.25		0.50		0.75		1.00		1.25		1.50		1.75		2.00	
			CFM	BHP	CFM	BHP	CFM	BHP	CFM	BHP	CFM	BHP	CFM	BHP	CFM	BHP	CFM	BHP	CFM	BHP
5.0	1460	4.5	5005	3.2	4800	3.2	4650	3.1	4475	3.0	4200	2.9	4000	2.8	3750	2.8	3400	2.7	3100	2.5
	1610	2	5550	4.2	5375	4.2	5250	4.1	5100	4.1	4900	4.0	4650	3.9	4500	3.8	4250	3.7	4000	3.6
	1725	0							5525	5.0	5475	5.0	5200	4.9	5050	4.8	4800	4.6	4600	4.5
7.5	1560	4.5	5275	3.7	5200	3.6	4900	3.5	4775	3.5	4550	3.4	4350	3.3	4125	3.3	3875	3.2	3575	3.1
	1740	2	5950	5.0	5825	5.0	5625	4.9	5490	4.9	5325	4.8	5125	4.7	4950	4.7	4750	4.6	4525	4.5
	1865	0	6500	6.5	6350	6.5	6225	6.4	6125	6.4	5910	6.3	5825	6.2	5625	6.1	5410	6.1	5300	6.0

Note: Brake Horse Power (BHP) is for one blower motor package only. **Operation in this zone will likely exceed FLA limits.**

Note: Airflow performance includes effect of clean, standard filter supplied with unit.

ELECTRICAL DATA

Standard Electrical Specifications							Optional Factory Installed VFD Electrical Specifications		
HP	Volts	HZ	Phase	FLA per motor	Min. Cir. Amps	Max. Overcurrent Protection Device	FLA per motor	Min. Cir. Amps	Max. Overcurrent Protection Device
5.0	208-230	60	Three	14.5-13.4	32.6	45	14.5-13.4	35.9	45
	460	60	Three	6.7	15.1	20	6.7	16.6	20
	575	60	Three	5.3	11.9	15	5.3	13.1	15
7.5	208-230	60	Three	21.0-19.0	47.3	60	21.0-19.0	52.0	60
	460	60	Three	9.5	21.4	25	9.5	23.5	25
	575	60	Three	7.6	17.1	20	7.6	18.8	20

Specifications may be subject to change without notice.

RenewAire® Energy Recovery Ventilation

HE6XRT Energy Recovery Ventilator Standard

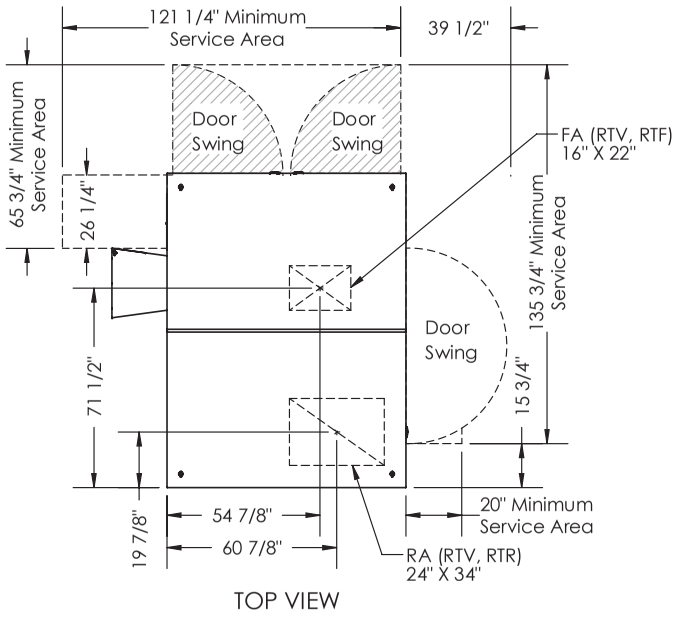

TOP VIEW

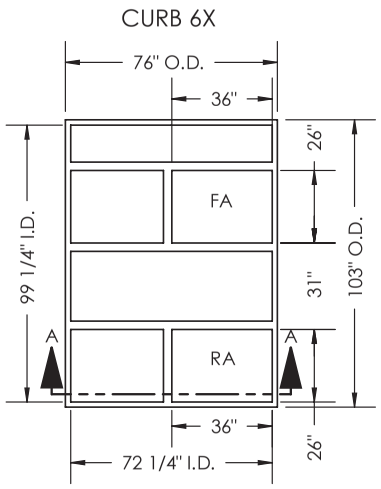

TOP VIEW

ABBREVIATIONS
EA: Exhaust Air to outside
OA: Outside Air intake
RA: Room Air to be exhausted
FA: Fresh Air to inside
RTV: Rooftop Vertical RA & FA
RTF: Rooftop Vertical FA Only
RTR: Rooftop Vertical RA Only
RTH: Rooftop Horizontal RA & FA

INSTALLATION ORIENTATION
Unit must be installed in orientation shown.

NOTE:
1. UNLESS OTHERWISE SPECIFIED, DIMENSIONS ARE ROUNDED TO THE NEAREST EIGHTH OF AN INCH.

2. SPECIFICATIONS MAY BE SUBJECT TO CHANGE WITHOUT NOTICE.

CURB CROSS-SECTION A-A (TYP.)

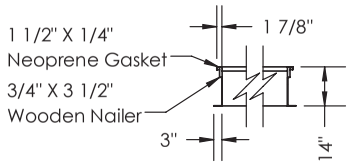

SECTION A-A

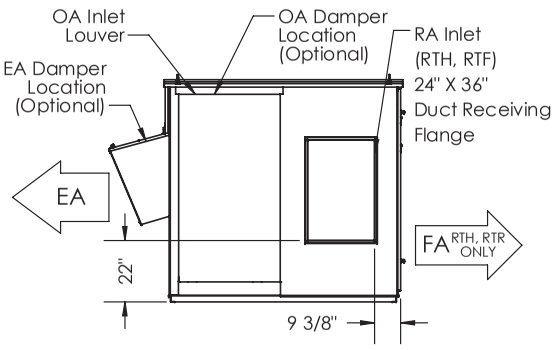

LEFT VIEW

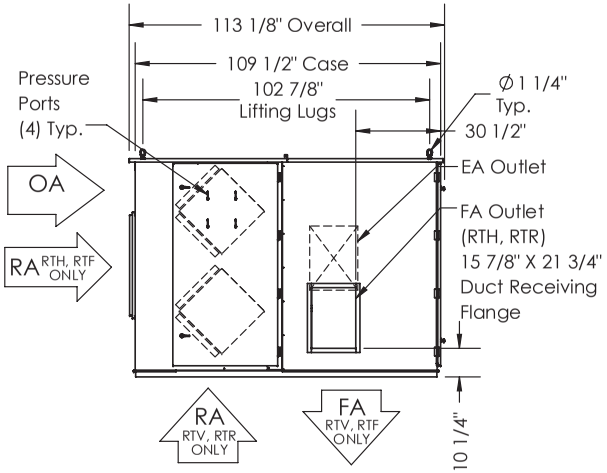

FRONT VIEW

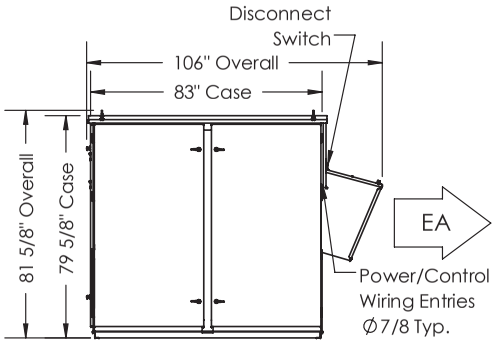

RIGHT VIEW

AIRFLOW CONFIGURATION

Available as shown:

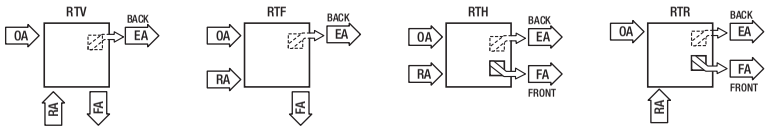

UNIT MOUNTING & APPLICATION

Must be mounted as shown. Airstreams can not be switched.

HE 8XIN

Energy Recovery Ventilator
Standard

AHRI CERTIFIED® www.ahridirectory.org
Globally Recognized. Industry Respected.

For safety listed products, see LE-SERIES models.

INDOOR UNIT

Download specification at:
renewaire.com/specifications

SPECIFICATIONS

Ventilation Type:
Static plate, heat and humidity transfer

Typical Airflow Range: 2,000-7,950 CFM

AHRI 1060 Certified Core:
Eight L125-G5

Standard Features:
TEFC Premium efficiency motors
Motor starters
Non-fused disconnect
24 VAC transformer/relay package
Cross-core differential pressure ports

Filters:
Total qty. 16, MERV 8: 20" x 20" x 2"

Unit Dimensions & Weight:
88" L x 113 1/2" W x 81 3/4" H
2,261-3,278 lbs., varies by option(s)

Max. Shipping Dimensions & Weight (on pallet):
116" L x 90" W x 90" H
3,618 lbs.

Motor(s):
Qty. 2, Belt drive blower/standard motor packages with adjustable sheaves (see table below)

Options:
Onboard variable frequency drives (VFDs) - one or both airstreams
Shaft grounding ring on motors with VFDs
Fused disconnect
Integrated programmable controls - enhanced, premium
Bypass economizer damper (see bypass DIM drawing) - dry-bulb temperature controls (standard), enthalpy controls (option)
Class 1 low leakage motorized isolation dampers - OA, EA or both airstreams
Qty. 2, Factory mounted filter alarms - both airstreams
Double wall construction
Exterior paint - white, custom colors

Accessories:
Filters - MERV 13, 2" (shipped loose)
Digital time clock - wall mount (TC7D-W), in exterior enclosure (TC7D-E)
Carbon dioxide sensor/control - wall mount (CO2-W), duct mount (CO2-D)
IAQ sensor - wall mount (IAQ-W), duct mount (IAQ-D)
Motion occupancy sensor/control - ceiling mount (MC-C), wall mount (MC-W)
Smoke Detector - duct mount (SD-D)
Electric duct heater - EK series (1–175 kW)
Indirect gas-fired duct furnace - GH series (50-400 MBH), installed downstream of any fans

AIRFLOW PERFORMANCE

Motor HP	Blower RPM	Sheave Adj. Turns Open	External Static Pressure (in. w.g.)																	
			0.00		0.25		0.50		0.75		1.00		1.25		1.50		1.75		2.00	
			CFM	BHP	CFM	BHP	CFM	BHP	CFM	BHP	CFM	BHP	CFM	BHP	CFM	BHP	CFM	BHP	CFM	BHP
5.0	1460	4.5	5575	3.2	5425	3.2	5200	3.2	5000	3.2	4775	3.1	4550	3.0	4270	2.9	4000	2.8	3625	2.7
	1610	2	6200	4.3	6010	4.3	5875	4.2	5700	4.2	5500	4.2	5325	4.1	5125	4.1	4900	4.0	4625	3.9
	1725	0	6650	5.2	6500	5.2	6375	5.2	6200	5.2	6050	5.1	5875	5.1	5700	5.1	5490	5.0	5250	4.9
7.5	1560	4.5	6000	3.9	5850	3.9	5650	3.8	5475	3.8	5275	3.8	5100	3.7	4875	3.7	4600	3.6	4300	3.5
	1740	2	6700	5.3	6575	5.3	6400	5.3	6300	5.3	6125	5.3	5950	5.2	5750	5.2	5575	5.1	5325	5.1
	1865	0	7225	7.6	7075	7.6	6950	7.6	6800	7.5	6675	7.5	6500	7.5	6375	7.4	6200	7.4	6000	7.3
10.0	1810	4.5	7000	6.1	6875	6.1	6750	6.1	6600	6.0	6425	6.0	6275	6.0	6100	5.9	5925	5.8	5875	5.8
	2020	2	7850	8.3	7745	8.3	7625	8.2	7450	8.2	7350	8.2	7200	8.1	7050	8.1	6925	8.0	6775	8.0
	2105	1					7950	9.1	7800	9.1	7725	9.1	7600	9.0	7450	9.0	7300	8.9	7150	8.9

Note: Brake Horse Power (BHP) is for one blower motor package only. **Operation in this zone will likely exceed FLA limits.**

Note: Airflow performance includes effect of clean, standard filter supplied with unit.

ELECTRICAL DATA

Standard Electrical Specifications							Optional Factory Installed VFD Electrical Specifications		
HP	Volts	HZ	Phase	FLA per motor	Min. Cir. Amps	Max. Overcurrent Protection Device	FLA per motor	Min. Cir. Amps	Max. Overcurrent Protection Device
5.0	208-230	60	Three	14.5-13.4	32.6	45	14.5-13.4	35.9	45
	460	60	Three	6.7	15.1	20	6.7	16.6	20
	575	60	Three	5.3	11.9	15	5.3	13.1	15
7.5	208-230	60	Three	21.0-19.0	47.3	60	21.0-19.0	52.0	60
	460	60	Three	9.5	21.4	25	9.5	23.5	25
	575	60	Three	7.6	17.1	20	7.6	18.8	20
10.0	208-230	60	Three	27.0-25.0	60.8	80	27.0-25.0	66.8	80
	460	60	Three	12.5	28.1	35	12.5	30.9	35
	575	60	Three	9.76	22.0	30	9.76	24.2	30

Specifications may be subject to change without notice.

RenewAire® Energy Recovery Ventilation

HE8XIN Energy Recovery Ventilator Standard

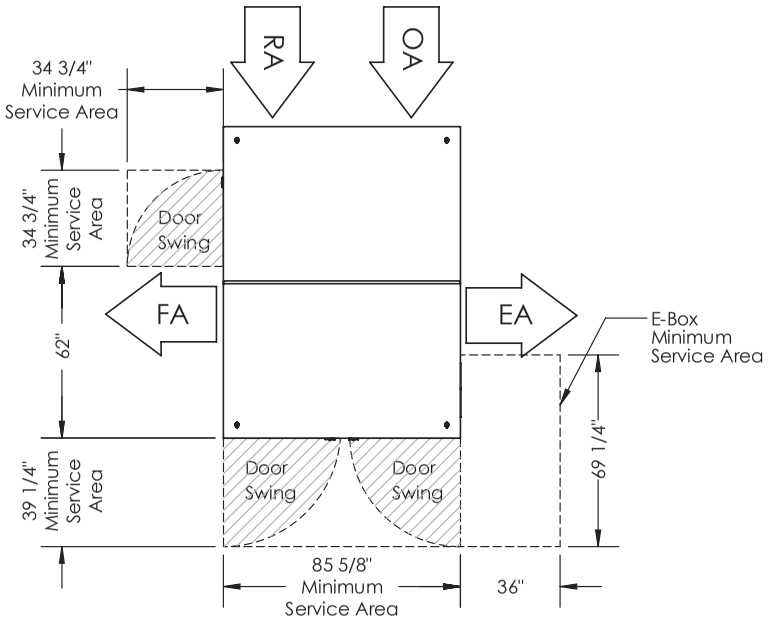

TOP VIEW

ABBREVIATIONS
EA: Exhaust Air to outside
OA: Outside Air intake
RA: Room Air to be exhausted
FA: Fresh Air to inside

INSTALLATION ORIENTATION
Unit must be installed in orientation shown.

NOTE
1.ALL UNITS HAVE INTERNAL EA BACKDRAFT DAMPER. UNLESS AN EA MOTORIZED ISOLATION DAMPER IS SPECIFIED.

2.UNLESS OTHERWISE SPECIFIED, DIMENSIONS ARE ROUNDED TO THE NEAREST EIGHTH OF AN INCH.

3.SPECIFICATIONS MAY BE SUBJECT TO CHANGE WITHOUT NOTICE.

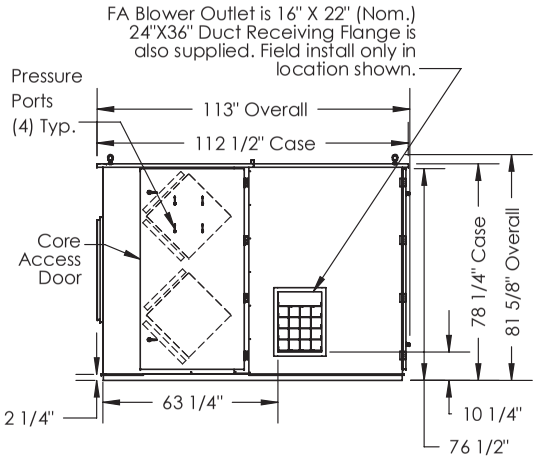

LEFT VIEW

FRONT VIEW

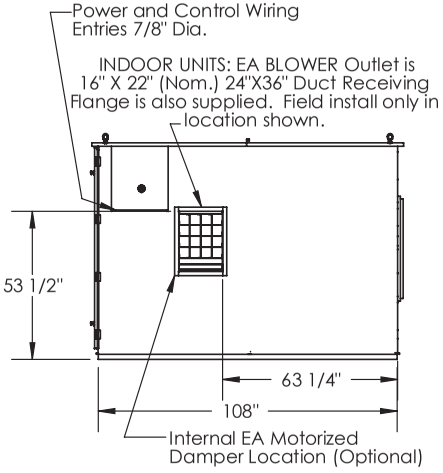

RIGHT VIEW

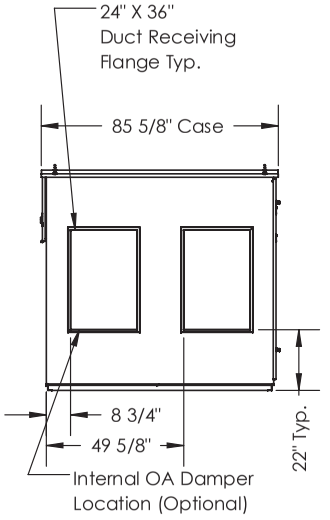

BACK VIEW

AIRFLOW CONFIGURATION
Available as shown in dimension drawing.

UNIT MOUNTING & APPLICATION
Must be mounted as shown. Airstreams can not be switched.

HE 8XIN

Energy Recovery Ventilator
Standard with Bypass Economizer

AHRI CERTIFIED® www.ahridirectory.org
Globally Recognized. Industry Respected.

For safety listed products, see LE-SERIES models.

INDOOR UNIT

Download specification at:
renewaire.com/specifications

SPECIFICATIONS

Ventilation Type:
Static plate, heat and humidity transfer

Typical Airflow Range: 2,000-7,950 CFM

AHRI 1060 Certified Core:
Eight L125-G5

Standard Features:
TEFC Premium efficiency motors
Motor starters
Non-fused disconnect
24 VAC transformer/relay package
Cross-core differential pressure ports

Filters:
Total qty. 16, MERV 8: 20" x 20" x 2"

Unit Dimensions & Weight:
88" L x 113 1/2" W x 81 3/4" H
2,261-3,278 lbs., varies by option(s)

Max. Shipping Dimensions & Weight (on pallet):
116" L x 90" W x 90" H
3,618 lbs.

Motor(s):
Qty. 2, Belt drive blower/standard motor packages with adjustable sheaves (see table below)

Options:
Onboard variable frequency drives (VFDs) - one or both airstreams
Shaft grounding ring on motors with VFDs
Fused disconnect
Integrated programmable controls - enhanced, premium
Bypass economizer damper (see bypass DIM drawing) - dry-bulb temperature controls (standard), enthalpy controls (option)
Class 1 low leakage motorized isolation dampers - OA, EA or both airstreams
Qty. 2, Factory mounted filter alarms - both airstreams
Double wall construction
Exterior paint - white, custom colors

Accessories:
Filters - MERV 13, 2" (shipped loose)
Digital time clock - wall mount (TC7D-W), in exterior enclosure (TC7D-E)
Carbon dioxide sensor/control - wall mount (CO2-W), duct mount (CO2-D)
IAQ sensor - wall mount (IAQ-W), duct mount (IAQ-D)
Motion occupancy sensor/control - ceiling mount (MC-C), wall mount (MC-W)
Smoke Detector - duct mount (SD-D)
Electric duct heater - EK series (1–175 kW)
Indirect gas-fired duct furnace - GH series (50-400 MBH), installed downstream of any fans

AIRFLOW PERFORMANCE

Motor HP	Blower RPM	Sheave Adj. Turns Open	External Static Pressure (in. w.g.)																	
			0.00		0.25		0.50		0.75		1.00		1.25		1.50		1.75		2.00	
			CFM	BHP	CFM	BHP	CFM	BHP	CFM	BHP	CFM	BHP	CFM	BHP	CFM	BHP	CFM	BHP	CFM	BHP
5.0	1460	4.5	5575	3.2	5425	3.2	5200	3.2	5000	3.2	4775	3.1	4550	3.0	4270	2.9	4000	2.8	3625	2.7
	1610	2	6200	4.3	6010	4.3	5875	4.2	5700	4.2	5500	4.2	5325	4.1	5125	4.1	4900	4.0	4625	3.9
	1725	0	6650	5.2	6500	5.2	6375	5.2	6200	5.2	6050	5.1	5875	5.1	5700	5.1	5490	5.0	5250	4.9
7.5	1560	4.5	6000	3.9	5850	3.9	5650	3.8	5475	3.8	5275	3.8	5100	3.7	4875	3.7	4600	3.6	4300	3.5
	1740	2	6700	5.3	6575	5.3	6400	5.3	6300	5.3	6125	5.3	5950	5.2	5750	5.2	5575	5.1	5325	5.1
	1865	0	7225	7.6	7075	7.6	6950	7.6	6800	7.5	6675	7.5	6500	7.5	6375	7.4	6200	7.4	6000	7.3
10.0	1810	4.5	7000	6.1	6875	6.1	6750	6.1	6600	6.0	6425	6.0	6275	6.0	6100	5.9	5925	5.8	5875	5.8
	2020	2	7850	8.3	7745	8.3	7625	8.2	7450	8.2	7350	8.2	7200	8.1	7050	8.1	6925	8.0	6775	8.0
	2105	1					7950	9.1	7800	9.1	7725	9.1	7600	9.0	7450	9.0	7300	8.9	7150	8.9

Note: Brake Horse Power (BHP) is for one blower motor package only. **Operation in this zone will likely exceed FLA limits.**

Note: Airflow performance includes effect of clean, standard filter supplied with unit.

ELECTRICAL DATA

Standard Electrical Specifications							Optional Factory Installed VFD Electrical Specifications		
HP	Volts	HZ	Phase	FLA per motor	Min. Cir. Amps	Max. Overcurrent Protection Device	FLA per motor	Min. Cir. Amps	Max. Overcurrent Protection Device
5.0	208-230	60	Three	14.5-13.4	32.6	45	14.5-13.4	35.9	45
	460	60	Three	6.7	15.1	20	6.7	16.6	20
	575	60	Three	5.3	11.9	15	5.3	13.1	15
7.5	208-230	60	Three	21.0-19.0	47.3	60	21.0-19.0	52.0	60
	460	60	Three	9.5	21.4	25	9.5	23.5	25
	575	60	Three	7.6	17.1	20	7.6	18.8	20
10.0	208-230	60	Three	27.0-25.0	60.8	80	27.0-25.0	66.8	80
	460	60	Three	12.5	28.1	35	12.5	30.9	35
	575	60	Three	9.76	22.0	30	9.76	24.2	30

Specifications may be subject to change without notice.

RenewAire® Energy Recovery Ventilation

HE8XIN Energy Recovery Ventilator Standard with Bypass Economizer

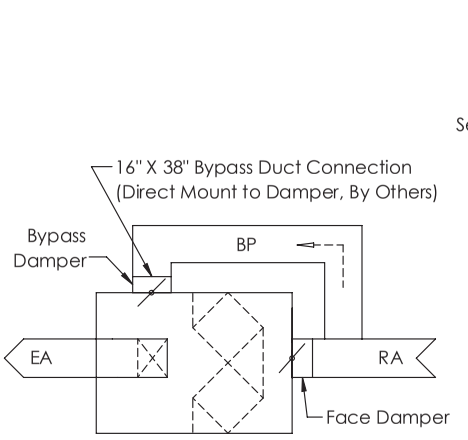

BYPASS AIRFLOW SCHEMATIC
RIGHT VIEW
(OA/FA Airstream Not Shown)

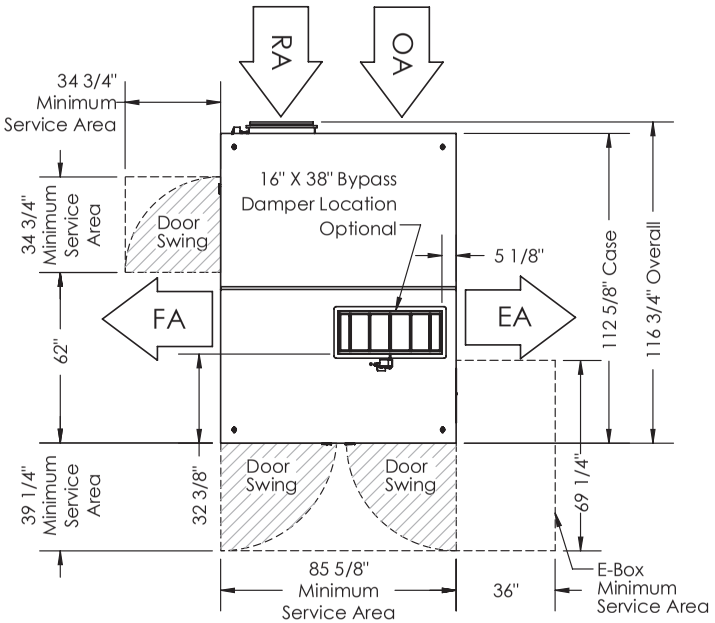

TOP VIEW

ABBREVIATIONS
EA: Exhaust Air to outside
OA: Outside Air intake
RA: Room Air to be exhausted
FA: Fresh Air to inside
BP: Bypass Air Intake

INSTALLATION ORIENTATION
Unit must be installed in orientation shown.

NOTE
1.ALL UNITS HAVE INTERNAL EA BACKDRAFT DAMPER. UNLESS AN EA MOTORIZED ISOLATION DAMPER IS SPECIFIED.

2.UNLESS OTHERWISE SPECIFIED, DIMENSIONS ARE ROUNDED TO THE NEAREST EIGHTH OF AN INCH.

3.SPECIFICATIONS MAY BE SUBJECT TO CHANGE WITHOUT NOTICE.

4. DAMPER SWINGS IN DIRECTION OF AIRFLOW. MIN. DUCT CLEARANCE FROM DAMPER BLADE WHEN FULLY OPENED TO BE 2". SMACNA RULES APPLY.

5. UNITS WITH BYPASS WILL REQUIRE ADDITIONAL SPACE FOR THE CONNECTION OF THE BYPASS DUCT (BY OTHERS).

6. FOR INSTALLATION DETAILS, REFER TO I&O MANUAL SUPPLEMENT FOR BYPASS.

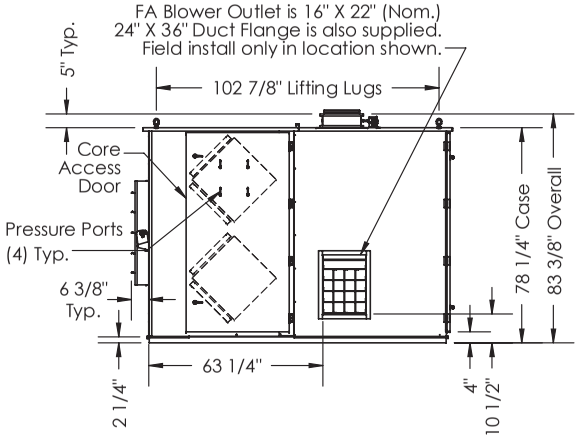

LEFT VIEW

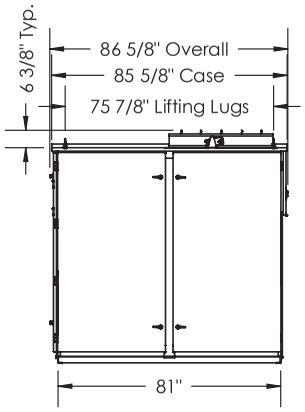

FRONT VIEW

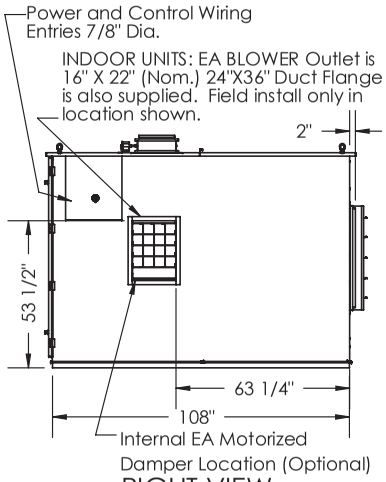

RIGHT VIEW

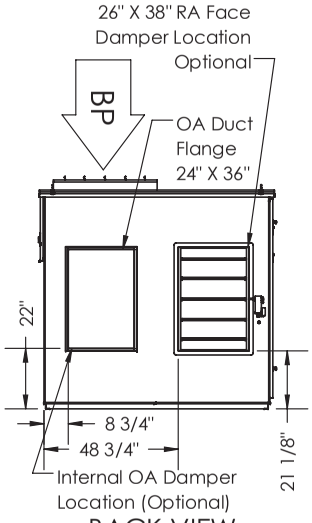

BACK VIEW

AIRFLOW CONFIGURATION
Available as shown in dimension drawing.

UNIT MOUNTING & APPLICATION
Must be mounted as shown. Airstreams can not be switched.

HE 8XRT

Energy Recovery Ventilator
Standard

AHRI CERTIFIED® www.ahridirectory.org
Globally Recognized. Industry Respected.

For safety listed products, see LE-SERIES models.

ROOFTOP UNIT

Download specification at:
renewaire.com/specifications

SPECIFICATIONS

Ventilation Type:
Static plate, heat and humidity transfer

Typical Airflow Range: 2,000-7,950 CFM

AHRI 1060 Certified Core:
Eight L125-G5

Standard Features:
TEFC Premium efficiency motors
Motor starters
Non-fused disconnect
24 VAC transformer/relay package
Cross-core differential pressure ports

Filters:
Total qty. 16, MERV 8: 20" x 20" x 2"

Unit Dimensions & Weight:
106 1/2" L x 140 1/2" W x 81 3/4" H
2,399-3,416 lbs., varies by option(s)

Max. Shipping Dimensions & Weight (on pallet):
Pallet 1 (unit): 116" L x 90" W x 90" H
Pallet 2 (hoods): 60" L x 42" W x 90" H
3,756 lbs.

Motor(s):
Qty. 2, Belt drive blower/standard motor packages with adjustable sheaves (see table below)

Options:
Onboard variable frequency drives (VFDs) - one or both airstreams
Shaft grounding ring on motors with VFDs
Fused disconnect
Integrated programmable controls - enhanced, premium
Class 1 low leakage motorized isolation dampers - OA, EA or both airstreams
Qty. 2, Factory mounted filter alarms - both airstreams
Double wall construction
Exterior paint - white, custom colors

Accessories:
Filters - MERV 13, 2" (shipped loose)
Roof curb - standard 14"
Curb wind clip
Engineered combo curb for Carrier RTU
Engineered combo curb for Trane RTU
Digital time clock - wall mount (TC7D-W), in exterior enclosure (TC7D-E)
Carbon dioxide sensor/control - wall mount (CO2-W), duct mount (CO2-D)
IAQ sensor - wall mount (IAQ-W), duct mount (IAQ-D)
Motion occupancy sensor/control - ceiling mount (MC-C), wall mount (MC-W)
Smoke Detector - duct mount (SD-D)
Electric duct heater - EK series (1–175 kW); designed for indoor ductwork installation only
Indirect gas-fired duct furnace - GH series (50-400 MBH), installed downstream of any fans

AIRFLOW PERFORMANCE

Motor HP	Blower RPM	Sheave Adj. Turns Open	External Static Pressure (in. w.g.)																	
			0.00		0.25		0.50		0.75		1.00		1.25		1.50		1.75		2.00	
			CFM	BHP	CFM	BHP	CFM	BHP	CFM	BHP	CFM	BHP	CFM	BHP	CFM	BHP	CFM	BHP	CFM	BHP
5.0	1460	4.5	5575	3.2	5425	3.2	5200	3.2	5000	3.2	4775	3.1	4550	3.0	4270	2.9	4000	2.8	3625	2.7
	1610	2	6200	4.3	6010	4.3	5875	4.2	5700	4.2	5500	4.2	5325	4.1	5125	4.1	4900	4.0	4625	3.9
	1725	0	6650	5.2	6500	5.2	6375	5.2	6200	5.2	6050	5.1	5875	5.1	5700	5.1	5490	5.0	5250	4.9
7.5	1560	4.5	6000	3.9	5850	3.9	5650	3.8	5475	3.8	5275	3.8	5100	3.7	4875	3.7	4600	3.6	4300	3.5
	1740	2	6700	5.3	6575	5.3	6400	5.3	6300	5.3	6125	5.3	5950	5.2	5750	5.2	5575	5.1	5325	5.1
	1865	0	7225	7.6	7075	7.6	6950	7.6	6800	7.5	6675	7.5	6500	7.5	6375	7.4	6200	7.4	6000	7.3
10.0	1810	4.5	7000	6.1	6875	6.1	6750	6.1	6600	6.0	6425	6.0	6275	6.0	6100	5.9	5925	5.8	5875	5.8
	2020	2	7850	8.3	7745	8.3	7625	8.2	7450	8.2	7350	8.2	7200	8.1	7050	8.1	6925	8.0	6775	8.0
	2105	1					7950	9.1	7800	9.1	7725	9.1	7600	9.0	7450	9.0	7300	8.9	7150	8.9

Note: Brake Horse Power (BHP) is for one blower motor package only. **Operation in this zone will likely exceed FLA limits.**

Note: Airflow performance includes effect of clean, standard filter supplied with unit.

ELECTRICAL DATA

Standard Electrical Specifications							Optional Factory Installed VFD Electrical Specifications		
HP	Volts	HZ	Phase	FLA per motor	Min. Cir. Amps	Max. Overcurrent Protection Device	FLA per motor	Min. Cir. Amps	Max. Overcurrent Protection Device
5.0	208-230	60	Three	14.5-13.4	32.6	45	14.5-13.4	35.9	45
	460	60	Three	6.7	15.1	20	6.7	16.6	20
	575	60	Three	5.3	11.9	15	5.3	13.1	15
7.5	208-230	60	Three	21.0-19.0	47.3	60	21.0-19.0	52.0	60
	460	60	Three	9.5	21.4	25	9.5	23.5	25
	575	60	Three	7.6	17.1	20	7.6	18.8	20
10.0	208-230	60	Three	27.0-25.0	60.8	80	27.0-25.0	66.8	80
	460	60	Three	12.5	28.1	35	12.5	30.9	35
	575	60	Three	9.76	22.0	30	9.76	24.2	30

Specifications may be subject to change without notice.

RenewAire® Energy Recovery Ventilation

HE8XRT Energy Recovery Ventilator Standard

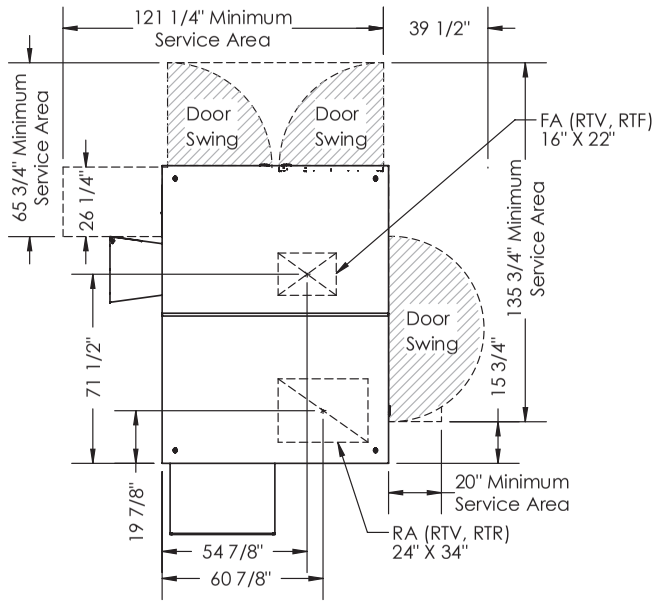

TOP VIEW

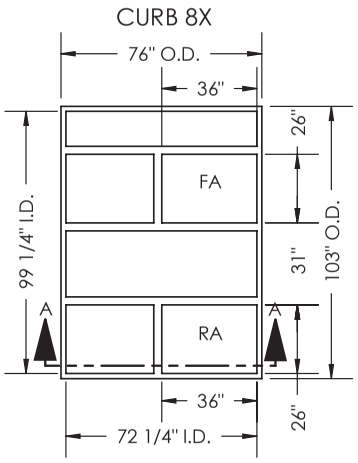

TOP VIEW

ABBREVIATIONS
EA: Exhaust Air to outside
OA: Outside Air intake
RA: Room Air to be exhausted
FA: Fresh Air to inside
RTV: Rooftop Vertical RA & FA
RTF: Rooftop Vertical FA Only
RTR: Rooftop Vertical RA Only
RTH: Rooftop Horizontal RA & FA

INSTALLATION ORIENTATION
Unit must be installed in orientation shown.

NOTE:
1. UNLESS OTHERWISE SPECIFIED, DIMENSIONS ARE ROUNDED TO THE NEAREST EIGHTH OF AN INCH.

2. SPECIFICATIONS MAY BE SUBJECT TO CHANGE WITHOUT NOTICE.

CURB CROSS-SECTION A-A (TYP.)

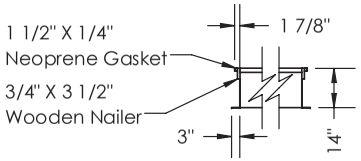

SECTION A-A

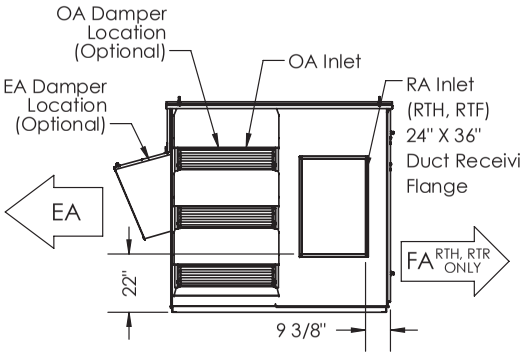

LEFT VIEW

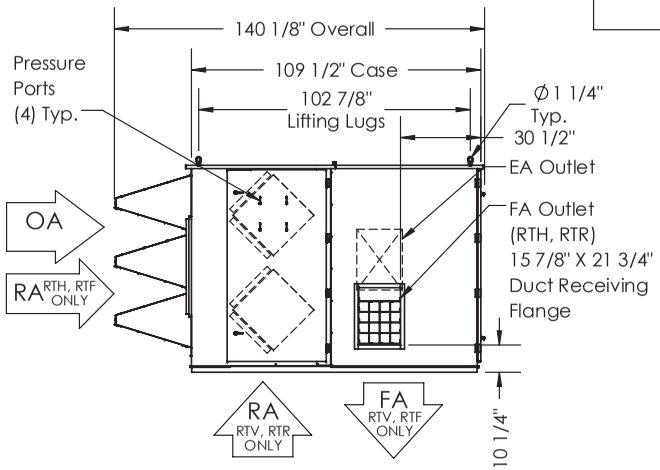

FRONT VIEW

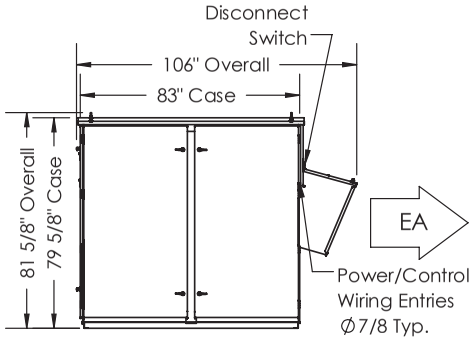

RIGHT VIEW

AIRFLOW CONFIGURATION

Available as shown in dimension drawing.

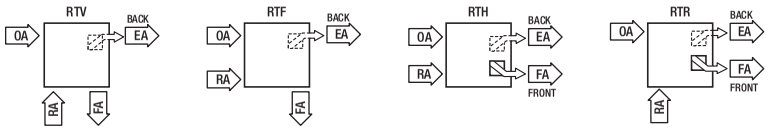

UNIT MOUNTING & APPLICATION

Must be mounted as shown. Airstreams can not be switched.

THIS PAGE IS INTENTIONALLY LEFT BLANK.

OPTIONS

See individual submittal pages for availability by model.

EC MOTOR

- Best energy efficiency
- Two speed, single speed, or variable speed operation
- Easy airflow setup using RenewAire's standard pressure taps - cuts commissioning time

ELECTRICAL

- Disconnect fuses and motor starters
- Independent blower control (IBC) available as an option for HE1X and HE1.5X

VARIABLE FREQUENCY DRIVE

- Factory supplied and mounted variable frequency drives (VFDs) - one or both airstreams
- Provides additional control options
- Separate VFD for each airstream
- Display/control in electrical box - can be remotely mounted
- Pre-programmed speeds or variable speed
- Easy airflow setup using RenewAire's standard pressure ports - cuts commissioning time
- Shaft grounding ring on motors with VFDs

VFD all voltage except 575V

VFD 575V only

MOTORIZED ISOLATION DAMPERS

- Class 1, low leakage
- Robust, reliable actuators for highest dependability
- Automatic operation with spring return in event of power loss
- Damper(s) are factory mounted and wired (except in HE1XIN - shipped loose)

FILTER ALARM

- Factory mounted airflow switches - one for each airstream
- Allows for remote indication of loaded (dirty) filter

EXTERIOR PAINT

- White and custom colors available

Specifications may be subject to change without notice.

OPTIONS

Bypass Economizer

AVAILABLE ON ALL HE-SERIES INDOOR UNITS

By utilizing what nature offers, our bypass economizer can "free cool" indoor spaces by using tempered and filtered outdoor air when the temperature and/or humidity are within a favorable range. This process **MAXIMIZES OPERATING EFFICIENCIES** and **REDUCES ENERGY** use and costs, all while indoor air quality is Enhanced—a win-win for occupant health, the environment and the bottom line. Bypass can now be specified for all RenewAire HE indoor units as a factory option.

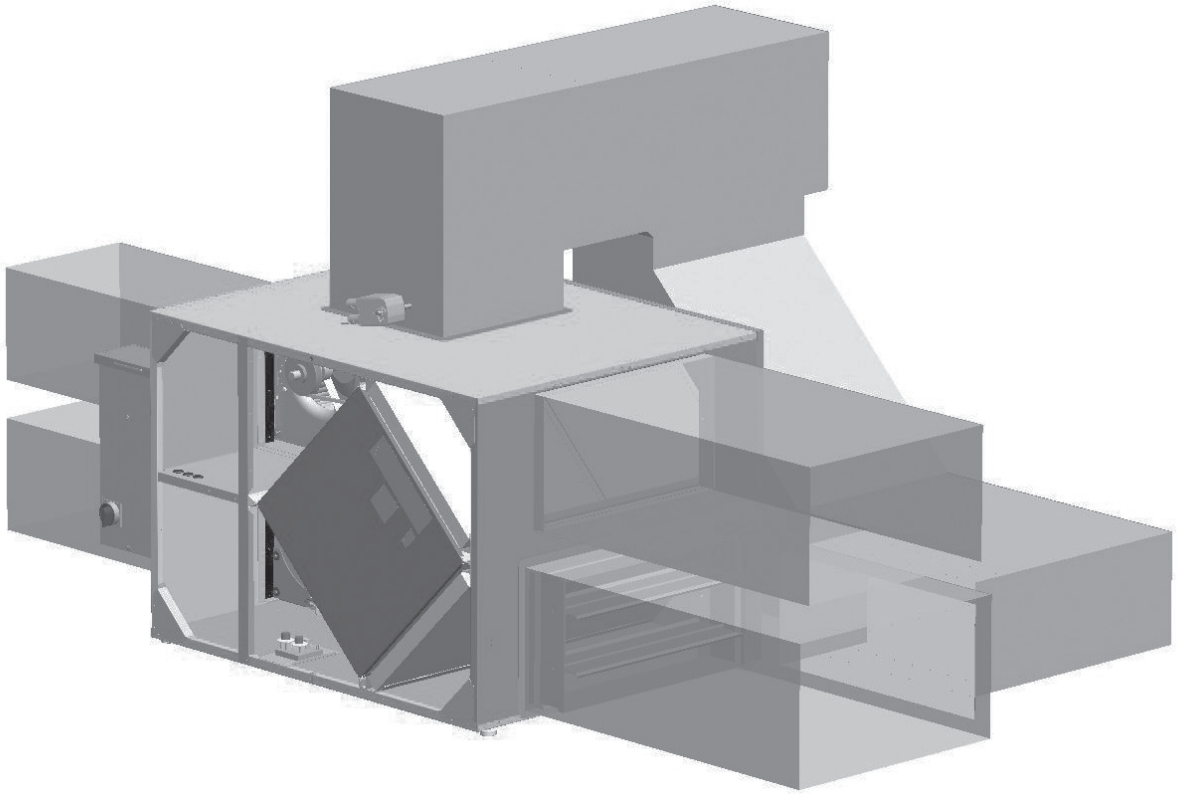

KEY BENEFITS

- **Reduce energy use and costs:**
  Energy efficiency is optimized since the bypass provides airside economizer capabilities to the building mechanical system.
- **Flexible design:**
  Bypass allows for flexibility in the routing of the bypass duct. Additionally, the dampers are adjustable and AMCA Class I certified for low leakage.
- **Increase installation opportunities:**
  HE indoor units can now be specified and installed on projects that require ERV bypass.
- **100% bypass of air:**
  Unlike other options on the market, RenewAire offers 100% core bypass of air, resulting in free cooling and further energy reductions.
- **Ultimate reliability:**
  Our commitment to innovative design practices, expert workmanship and Quick Response Manufacturing ensures unmatched reliability.
- **Fast and easy implementation:**
  The economizer option doesn't affect the current lead time of the base units, and it doesn't require any additional certifications.
- **Meet code requirements:**
  Bypass helps HE indoor units meet economizer requirements per building codes and other referenced standards.

Specifications may be subject to change without notice.

OPTIONS

Bypass Economizer

The bypass system consists of the addition of an **extra bypass duct**, two **electrically actuated dampers** and a **control system**. Bypass is achieved with the help of two dampers consisting of the face damper (normally closed) and the bypass damper (normally closed), factory-installed bypass controls and field-installed ductwork that links the return air to the exhaust air. **When conditions are favorable for bypass**, **the face damper closes** while the bypass damper opens simultaneously, thereby allowing for 100% of the return air to bypass the core. The Bypass Economizer option comes with two factory-supplied dampers and a bypass control system of your choice:

DAMPERS

Square Damper

Circle Damper

The **face damper** is factory-installed on the return air (RA) duct inlet for all units except HE1X. The **bypass damper** is also factory-installed on all units except HE1X and HE1.5X.

CONTROLS

Dry-bulb control:
The standard bypass control is temperature-based via a single outdoor-air controller and sensor.

Enthalpy control:
This optional bypass control is based on differential enthalpy and uses a return-air enthalpy sensor in conjunction with an outdoor-air enthalpy controller and a dry-bulb temperature controller.

FIELD-INSTALLED BYPASS DUCT SIZE RECOMMENDATIONS

ERV UNIT	FACE DAMPER	BYPASS DAMPER	RECOMMENDED BYPASS DUCT SIZE*
HE1XINH, HE1XINV	Shipped loose	Shipped loose	12"
HE1.5XINH, HE1.5XINV	Factory installed	Shipped loose	12"
HE2XINH, HE2XINV	Factory installed	Factory installed	16" x 16"
HE3XINH	Factory installed	Factory installed	30" x 16"
HE3XINV			36" x 14"
HE4XINH	Factory installed	Factory installed	34" x 16"
HE4XINV			42" x 14"
HE6XIN, HE8XIN	Factory installed	Factory installed	38" x 16"

* Recommended duct sizes are based on ensuring that the pressure drop in the bypass duct is less than the pressure drop through the core. Equivalent duct sizes at same pressure drop are acceptable.

NOTE: Installation of bypass duct per SMACNA guidelines.

100% ECONOMIZER

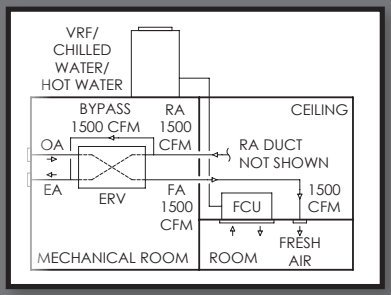

The Bypass Economizer option will provide 100% economizer capabilities in mechanical systems where the ERV is connected to a fan coil unit or supplying fresh air directly into the space. Examples of such systems are VRF, Chilled Beam or Chilled/Heated Panels.

PARTIAL ECONOMIZER

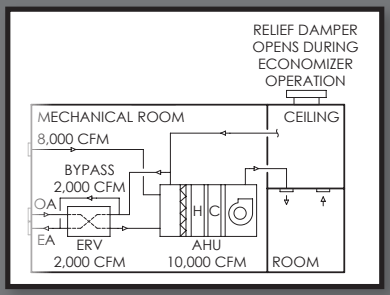

When connected to a main building air handler, the Bypass Economizer option shall offer partial bypass of only the ERV total airflow. For 100% economizer capability on the HVAC system, the air handler must be equipped with either powered relief or barometric relief economizer capacity (barometric relief shown).

OPTIONS

Integrated Programmable Controls

AVAILABLE ON ALL EV450, HE, LE, RD AND DN-SERIES UNITS

RenewAire's **INTEGRATED PROGRAMMABLE CONTROLS** optimize the usability and performance of our commercial ERVs by improving functionality, enabling intelligent controls, streamlining operations and boosting efficiencies. This is accomplished via sophisticated factory-installed microprocessor controls and sensors that provide stand-alone ERVs with Direct Digital Control (DDC) and/or Building Management System (BMS) control interface.

KEY BENEFITS

Optimize usability:

- Maximize ERV functionality and intelligent control via remote Ethernet accessibility and BMS connectivity without third-party interface.
- Streamline operations by easily managing and changing ERV control parameters via an advanced user interface.
- Increase uptime reliability through constant system monitoring.
- Achieve cleaner and healthier indoor air via IAQ-based ERV control.

Improve performance:

- Support effective and efficient ERV performance with real-time data trending and logging capabilities.
- Enhance ERV control via access to real-time airflow rates, airstream temperature and airstream humidity.
- Facilitate fast and easy ERV upkeep and maintenance with real-time fan, filter and bypass status.

Increase capabilities:

- Expand ERV connectivity via access to a wide range of open standard protocols, including BACnet and Modbus.
- Broaden ERV interoperability by connecting to third-party equipment and receiving third-party signals for unit control.
- Expand ERV-application scope by meeting new code requirements and the needs of institutional customers requiring DDC controls in mechanical equipment.

Simplify operations:

- Achieve easier ERV setup, commissioning and balancing via simple-to-install controls.
- Improve operational efficiencies by easily communicating ERV status, airflows, temperatures and humidity.
- Allow for more flexible installations by enabling ERVs to be interconnected with a BMS, operated independently or run in concert with other ERVs.

ACCESSORIES AVAILABLE WITH INTEGRATED PROGRAMMABLE CONTROLS

	STANDARD CONTROLS	ENHANCED CONTROLS	PREMIUM CONTROLS
CO2 sensor (wall or duct mount)*	◆		◆
IAQ sensor (wall or duct mount)*	◆		◆
Occupancy sensor (ceiling or wall mount)	◆		◆
Smoke detector (duct mount)	◆	◆	◆
BACnet factory activation (MS/TP or TCP/IP)		◆	◆
Remote display (handheld or wall mount)		◆	◆
Room Pressure Sensor (with or without display)			◆
Duct Static Pressure Sensor (with or without display)			◆
Temperature Sensor Kit (wall or duct mount)**			◆

NOTES

*Sensor output is 0-10 vdc, for use as on/off or modulating control.

**Temperature Sensor Kit is for use with non-integrated heating.

Specifications may be subject to change without notice.

RenewAire Energy Recovery Ventilation

OPTIONS

Integrated Programmable Controls

MODELS

STANDARD CONTROLS

via dry contact and relays

Our ERV units are provided with a dry contact that can be used to control the unit with a variety of low-voltage (24VAC) control devices such as remote switches or relays. In addition, third-party analog output can be used to operate the ERV.

ENHANCED CONTROLS

Carel [c.pCOMini] with or without BACnet

Enhanced controls offer automated control, including temperature and humidity control with data trending via microprocessor controls and sensors that enable BMS connectivity.

PREMIUM CONTROLS

Carel [c.pCOMini] with expansion module with or without BACnet

Premium controls include all functionality of Enhanced-controls capabilities, as well as airflow and IAQ monitoring, demand control, electric or gas heating options, as well as RD-Series cooling and heating control.

FEATURE COMPARISON

	STANDARD CONTROLS	ENHANCED CONTROLS	PREMIUM CONTROLS
Ability to automatically enable and disable unit	◆	◆	◆
Enable the exhaust fan only (See note 1)	◆	◆	◆
Filter alarm for both sets of filters (See note 2)	◆	◆	◆
Bypass controls† (See note 3)	◆	◆	◆
Control isolation dampers† (See note 4)	◆	◆	◆
Supply fan only modulation for VFD/EC Motor units† (See note 5 and 6)	◆	◆	◆
Exhaust fan only modulation for VFD/EC Motor units† (See note 5 and 6)	◆	◆	◆
Internal time clock (See note 7)	◆	◆	◆
Defrost controls - Canada only	◆	◆	◆
Smoke detection - sensor required (See note 8)	◆	◆	◆
Demand control ventilation using CO2 - sensor required	◆		◆
Occupancy-based ventilation - sensor required	◆		◆
IAQ control ventilation using VOC - sensor required	◆		◆
Microprocessor controller		◆	◆
Provide supply and exhaust air temperatures		◆	◆
Provide outside and return air temperature and humidity		◆	◆
Fan status on both fans††		◆	◆
Enable the supply fan only†	◆	◆	◆
Enable the exhaust fan only†	◆	◆	◆
Micro USB port		◆	◆
Fieldbus port		◆	◆
BACnet MS/TP or BACnet TCP/IP - activation required		◆	◆
Modbus		◆	◆
Data trending		◆	◆
Outside airflow rate			◆
Exhaust airflow rate			◆
Space pressure control			◆
Duct pressure control			◆
Unit supply air temp			◆
Heating enable			◆
Heating modulation - staged or modulating			◆
Cooling modulation* - staged or modulating			◆

*RD-Series units only †Not available on EV450 ††EF fan status not available on EV450

NOTES FOR STANDARD CONTROLS ONLY

1. Relays and terminal block (option).
2. Differential pressure sensing tube and pressure switch with manual trip point adjustment (option), wiring to switch and alarm indication provided by others.
3. Option on HE-Series (IN) and standard on RD-Series.
4. 24V transformer contactors and relays (option).
5. VFD (option). Factory installed and wired.
6. EC Motor (option) Potentiometer control factory wired.
7. Independent time clock (option).
8. External smoke detector (option), field installed in series to shut off unit in adverse conditions.

Specifications may be subject to change without notice.

ACCESSORIES

Standard Controls

Standard controls are intended to turn RenewAire commercial energy recovery ventilation systems on and off at appropriate times. Specification, installation and set-up is an easy process. RenewAire HE, LE, and RD Series units come standard with a 24 volt transformer/relay package for easy interface with all controls.

It is not necessary that RenewAire controls be used to operate RenewAire units. A wide range of controls or building automation systems may be used.

***Available with Standard or Integrated Programmable Controls.**

****Only available with Integrated Programmable Controls.**

DIGITAL TIME CLOCK*

- Up to 8 on/off cycles per day or 56 per week
- 24 VAC power requirement
- Battery back-up
- Wall mount or outdoor enclosure options
- Wall mount fits any 4" x 4" electrical

TC7D-W
Wall Mount

TC7D-E Control In
NEMA 3R Enclosures

CO2 SENSORS*

- Adjustable control from 400-2000 PPM
- Digital display
- 24 VAC power requirement
- Computer/BAS interface for information and control
- Self calibrates during periods of low occupancy
- Wall mount or add duct mount accessory

CO2-W
Wall Mount

CO2-D
Duct Mount

IAQ SENSORS*

- Measures TVOC
- Direct correlation to CO2 levels
- 0-2000 ppm CO2 equivalent output signal
- Digital display on wall mount
- Selectable 0-5 or 0-10V dc signal
- 24 VAC power required
- Internal menu for easy set-up

IAQ-W
Wall Mount

IAQ-D
Duct Mount

MOTION OCCUPANCY SENSORS*

- Passive infared sensor
- Adjustable time-off delay to 30 minutes
- 24 VAC power requirement
- Ceiling mount or directable wall mount
- Coverage floor space
  - Ceiling mount: 1500 sq. ft.
  - Wall mount: 2500 sq. ft.
- Major motion area
  - Ceiling mount: 50 ft. diameter
  - Wall mount: 68 x 50 ft.

MC-C
Ceiling Mount

MC-W
Wall Mount

SMOKE DETECTOR*

- Photoelectric type detector
- Plug-in sensor
- Round, square or rectangular duct mounting options
- Easy access test/reset button and LED display
- For 100-4000 fpm duct air velocity applications
- 24 VAC power requirement
- Interconnect feature for multi-fan shutdown
- Built-in short circuit protection

SD-D
Duct Mount

Specifications may be subject to change without notice.

RenewAire Energy Recovery Ventilation

ACCESSORIES

Controls Continued

REMOTE DISPLAY**

- Hand held or wall mount
- LED display
- Keypad for easy programming

RD-M
Handheld or Wall Mount

PRESSURE SENSORS (ROOM PRESSURE/DUCT STATIC PRESSURE)**

- With or without display
- Differential pressure transmitter
- 4-20 mA or field selectable 0-10 & 0.5V output signal
- Integral barbed tubing connections that fit 1/8" and 3/16" ID tubing

RPS-WOD/DPS-WOD
Wall/Duct Mount
without Display

RPS-WD/DPS-WD
Wall/Duct Mount
with Display

BACNET FACTORY ACTIVATION**

- Allows for communication to a BAS via Bacnet NS/TP
- Factory programmed and tested

BN-A

TEMPERATURE SENSOR KIT**

- Duct temperature sensors
- Hermetically sealed 304SS probe
- Operating range -40F to 210F
- Easy installation with integral mounting plate

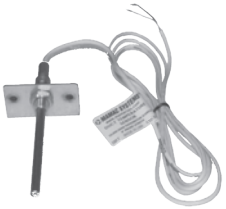

TS
Wall/Duct Mount

Engineered Combo Curbs

Exclusively designed for select Trane (Voyager and Precedent) and Carrier (WeatherExpert, WeatherMaster, and Weathermaker) models, RenewAire's engineered combo curb makes it easy to combine standard Air Handling Unit (AHU) rooftop applications with the benefits of RenewAire energy recovery ventilation. They eliminate the need for transitional ductwork between the RTU and the ERV, reducing the time and costs of installation. Simply install the curb, run the return and supply duct to the curb openings, then install the AHU and RenewAire units onto the curb. Additionally, the curbs allow the AHU unit to function in its standard operation as well as full-flow economizer modes.

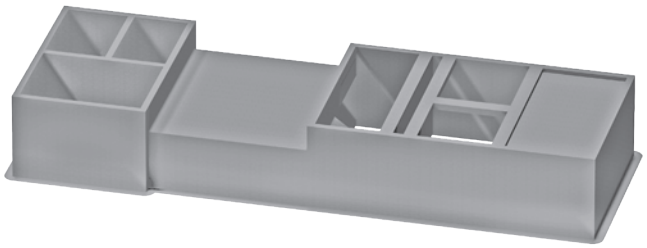

Standard Construction

- Prime G-90, 18-gauge galvanized steel
- Fully welded and mitered corners (single piece curb lift)
- Base flange attachments for securing to the building structure
- 1 ½" 3 lb. density fiberglass insulation
- Reinforced with cross channel supports on center
- Conforms to ASTM A653/A653M (standard specification for sheet metal)

Available Options (Special Order)

- Seismic and/or wind load applications
- Pitched roof applications
- High vibration applications
- Custom curb heights
- Heavier metal gauges
- Aluminum liners

ACCESSORIES

Hoods and Dampers

FA10-G & FA12-G

- 10" or 12" wall cap
- Galvanized finish
- Hood type wall cap
- 1/4" metal screen

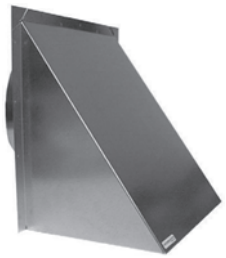

FA10-P & FA12-P

- 10" or 12" wall cap
- Galvanneal finish
- Paintable
- 1/4" metal screen

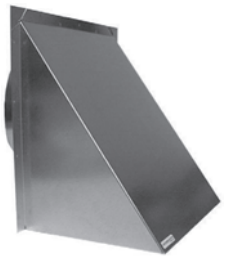

VW12X12

- 12" x 12" x 10" round louver
- Galvanized finish
- Flush mount
- 1/2" metal screen

BD10 & BD12

- 10", 12" backdraft damper
- Male/female ends
- Mechanical “butterfly” design

THIS PAGE IS INTENTIONALLY LEFT BLANK.

ACCESSORIES

RH Series Electric Duct Heater

AVAILABLE ON SINGLE/MULTI-FAMILY AND LIGHT COMMERCIAL UNITS (SOME EXCEPTIONS APPLY)

RenewAire offers the highest-efficiency energy recovery ventilators (ERVs) on the market. However, during winter conditions, supply air from the ERV may be less than optimal for space conditions. By adding **RENEWAIRE'S ROUND ELECTRIC DUCT HEATER** as an option to our single/multi-family and light commercial ERVs, RenewAire can now heat supply air during cooler months to enhance indoor comfort, all via one package for ERVs and heaters from a single source.

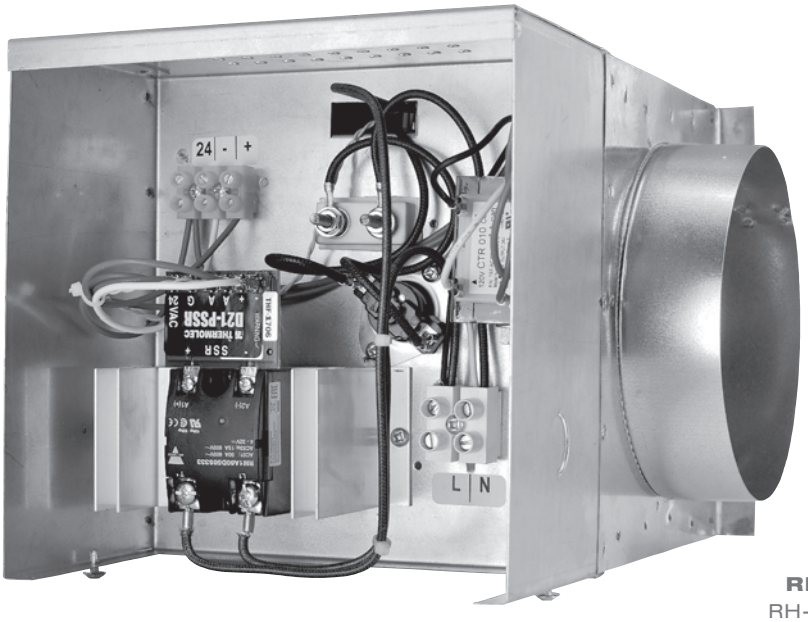

RH SERIES
RH-W SHOWN

KEY BENEFITS

- **A single source reduces time and costs:** A single information source, a single purchase point and a single approval package for ERVs and heaters reduces design time and costs, and streamlines logistics for design engineers and contractors.
- **More flexibility:** RenewAire offers design engineers the capacity to specify ERVs with a matching heater to boost flexibility and provide heated air to a single space or multiple spaces.
- **Easy installation:** A ZERO clearance rating to combustibles allows designers and contractors to apply RenewAire heaters with less restrictions onsite.
- **Ultimate reliability:** RenewAire heaters come with our two-year warranty and unmatched reliability. Single-source responsibility offers contractors and end users peace of mind and a single call location for technical, start-up and commissioning questions.
- **Highly certified:** CSA certified and evaluated to the applicable ANSI/UL and CSA Standards, for use in the U.S. and Canada.

Specifications may be subject to change without notice.

RH SERIES

ELECTRIC DUCT HEATER

NEW

Electric Duct Heater (1-11.5 kW)

Accessory

C SA US
LR 30551

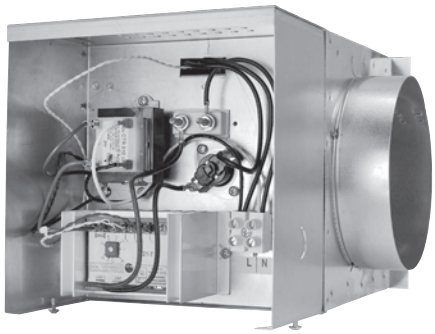

RH-D (Integral Thermostat)

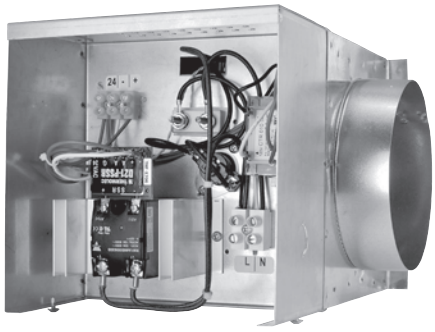

RH-W (Wall Mount Thermostat)

Download specification at:
renewaire.com/specifications

SPECIFICATIONS

Heater Type:
Electric Duct Heater

Typical KW Range:
1–11.5 kW (1, 2, 3, 4, 5, 6, 8, 10, 11.5 kW)

Voltages & Phase:
Single phase - 120, 208 and 240V

Control Voltage:
24 VAC

Standard Features:
Open-coil element
High grade nickel-chrome element wire
Thermostat - Integral (RH-D), Wall mount (RH-W)
Modulating heat output (SCR control)
Vertical or horizontal operation
Automatic limit switch for primary over-temperature protection
Manual reset limit switch for secondary over-temperature protection
Airflow sensor
Standard control transformer – 24 VAC
Corrosion resistant galvanized steel
Round duct collars
High voltage terminal block connections
Grounding lug
Mounting flanges

Note: Electric duct heater designed for indoor ductwork installation only.

Duct Collars	kW	V	Size	Width (X)	Height (Y)	Depth (Z)
6"	1, 2	120, 208, 240	A	11 1/2"	8"	11 1/2"
8"	3, 4, 5	208	B	11 1/2"	10"	13 1/2"
8"	3, 4, 5, 6	240	B	11 1/2"	10"	13 1/2"
10"	3, 4, 5	208	B	11 1/2"	10"	13 1/2"
10"	3, 4, 5, 6	240	B	11 1/2"	10"	13 1/2"
10"	8, 10, 11.5	240	C	15 1/2"	12"	15 1/2"
12"	6, 8, 10, 11.5	240	C	15 1/2"	12"	15 1/2"

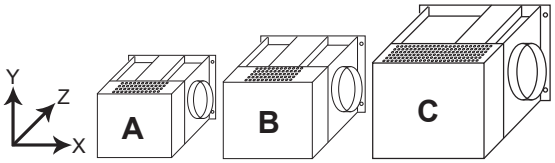

DIMENSIONS IN INCHES

SIZE	X	Y	Z
A	11.5	8.0	11.5
B	11.5	10.0	13.5
C	15.5	12.0	15.5

Minimum Airflow (CFM)	Heater Capacity (kW)
30	1.00
60	2.00
90	3.00
120	4.00
150	5.00
180	6.00
240	8.00
300	10.00
345	11.50

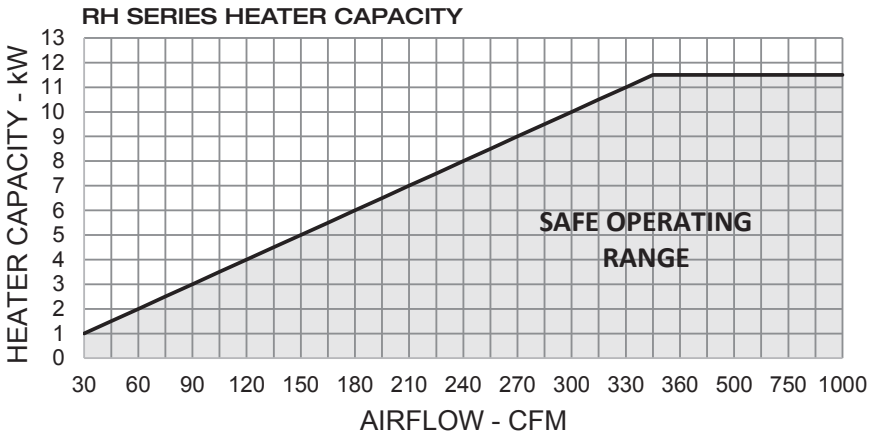

Specifications may be subject to change without notice.

ACCESSORIES

EK Series Electric Duct Heater

AVAILABLE ON ALL COMMERCIAL UNITS (SOME EXCEPTIONS APPLY)

RenewAire offers the highest-efficiency energy recovery ventilators (ERVs) on the market. However, during winter conditions, supply air from the ERV may be less than optimal for space conditions. By adding **CONFIGURABLE ELECTRIC DUCT HEATERS** as an accessory to our commercial ERVs, RenewAire can now heat supply air during cooler months to enhance indoor comfort, all via one package for ERVs and heaters from a single source.

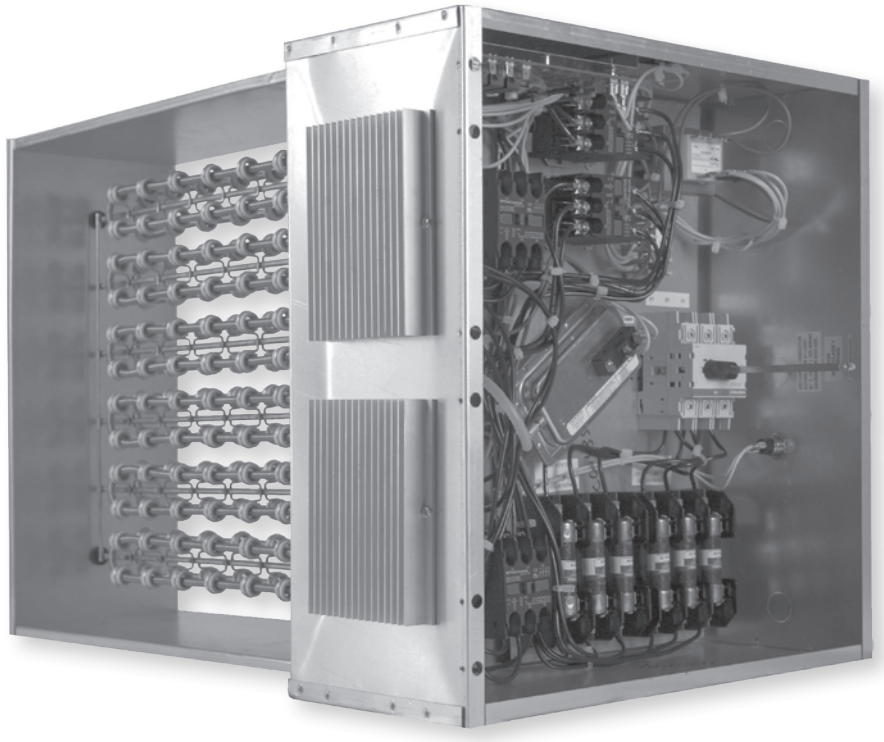

FLIPPABLE
EK SERIES
SHOWN

KEY BENEFITS

- **A single source reduces time and costs:** A single information source, a single purchase point and a single approval package for ERVs and heaters reduces design time and costs, and streamlines logistics for design engineers and contractors.
- **More flexibility:** RenewAire offers design engineers the capacity to specify ERVs with a matching heater to boost flexibility and provide heated air to a single space or multiple spaces.
- **Easy installation:** A ZERO clearance rating to combustibles allows designers and contractors to apply RenewAire heaters with less restrictions onsite.
- **Ultimate reliability:** RenewAire heaters come with our two-year warranty and unmatched reliability. Single-source responsibility offers contractors and end users peace of mind and a single call location for technical, start-up and commissioning questions.
- **Highly certified:** UL Listed (UL1996 Standard) and CSA certified.

Specifications may be subject to change without notice.

RenewAire Energy Recovery Ventilation

EK SERIES

Electric Duct Heater (1-175 kW)
Accessory

c UL us LISTED DUCTED HEAT RECOVERY VENTILATOR 8955

ELECTRIC DUCT HEATER

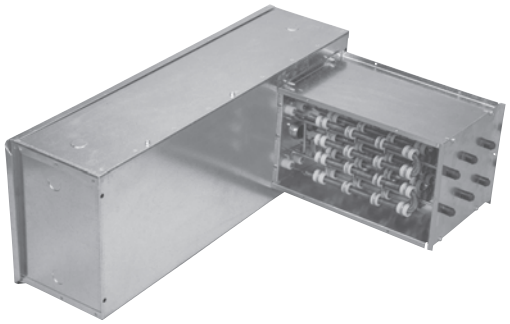

Download specification at:
renewaire.com/specifications

SPECIFICATIONS

Heater Type:
Electric Duct Heater

Typical KW Range:
1–175 kW

Standard Features:
A disconnecting magnetic control contactor per stage or each 48 Amp circuit within a stage
Open-coil element
Staged on/off
Control terminal board
Grounding lugs
Automatic limit switch for primary over-temperature protection
Manual reset limit switch for secondary over-temperature protection
Non-adjustable airflow switch
Standard control transformer - 24 VAC
Disconnect switch
Duct thermostat with sensor for on/off control
60-20-20 (Ni/Cr/Fe) C Grade element wire with nickel-plated terminals
Slip-in mount
No left/right hand
Vertical up/down flow

Voltages & Phase:
Single phase - 120, 208, 240, 277
Three phase - 208, 240, 480, 600

Control Voltage:
24 VAC

Dimensions:
Minimum - 8" x 8" (W x H)
Maximum - 99" x 99" (W x H)

Options:
Flange mount
80-20 (Ni/Cr) A Grade element wire with stainless steel terminals
Recessed control box 1"
Gasketed cover - dust tight
Power fusing, standard for heaters drawing more than 48 Amps
2-stage
Electronic step controller (4-stage)
SCR (up to 96 Amps)
SCR Vernier (over 96 Amps)
Pilot light

Accessory:
Room thermostat
Room/duct thermostat-sensor kit for SCR control

Note: Electric duct heater designed for indoor ductwork installation only.

EK SERIES HEATER CAPACITY

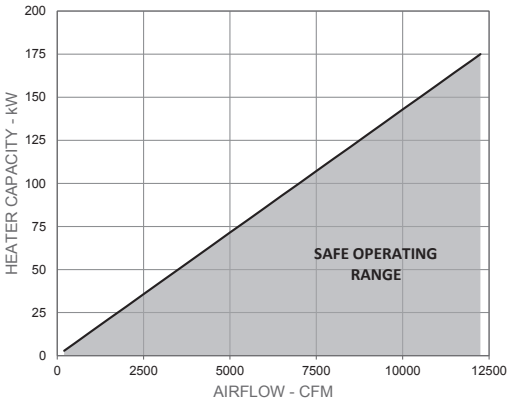

PRESSURE DROP THROUGH HEATER

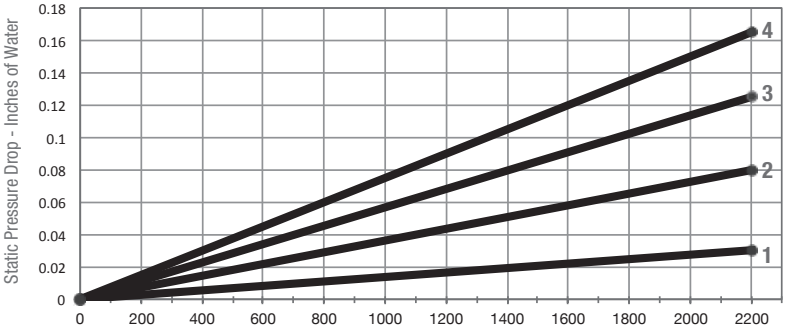

Air Velocity - FPM (1, 2, 3 and 4 - the number of rows of heater coils)
When the number of rows of heater coils is unknown, assume 4.

FLIPPABLE CAPABILITIES

Unique to the EK series, this unit has the ability to flip 180°. Additionally, EK heaters feature both vertical up and vertical down airflow.

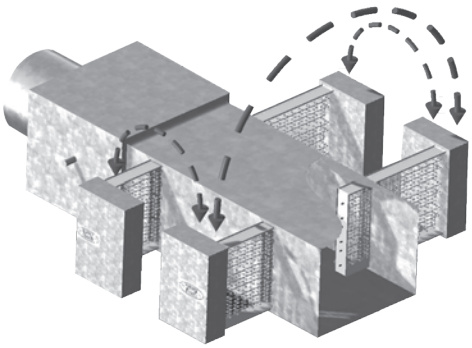

THIS PAGE IS INTENTIONALLY LEFT BLANK.

ACCESSORIES

Indirect Gas-Fired Duct Furnace

AVAILABLE ON ALL COMMERCIAL UNITS (SOME EXCEPTIONS APPLY)

RenewAire offers some of the highest-efficiency energy recovery ventilators (ERVs) on the market. However, during winter conditions, supply air from the ERV may be less than optimal for space conditions. By providing an indoor and outdoor **INDIRECT GAS-FIRED DUCT FURNACE** as an accessory for our commercial ERVs, in addition to the Electric Duct Heater, RenewAire ERVs now have increased flexibility for controlling supply-air temperature during cooler months. This enhances indoor comfort, makes ERV installations easier and is possible via a single source for ERVs and furnaces.

GH OUTDOOR SERIES
SHOWN

KEY BENEFITS

- **A single source for your ERV and furnace reduces time and costs:** A single information source, a single purchase point and a single approval package for ERVs and heaters reduces design time and costs, as well as streamlines logistics for design engineers and contractors.
- **Increased capabilities and flexibility:** RenewAire offers design engineers the capacity to specify ERVs with a matching indoor or outdoor gas-fired furnace to increase ERV capabilities and flexibility for providing a single space or multiple spaces with tempered air conditions to equal wintertime loads.
- **More and easier applications:** The addition of the indoor and outdoor indirect gas-fired duct furnace as an option ensures that RenewAire ERVs can be easily specified on more applications that require gas heating of the recovered air.
- **Expert guidance:** The RenewAire customer-support team will provide detailed and expert guidance for how best to install the indoor and outdoor gas-fired duct furnace with an ERV.
- **Ultimate reliability:** RenewAire furnaces come with our two-year warranty and unmatched reliability. Single-source responsibility offers contractors and end users peace of mind and a single call location for technical, start-up and commissioning questions.
- **Highly certified:** ETL-listed to the requirements of ANSI Z83.8/ CSA 2.6.

GH INDOOR

Indirect Gas-Fired Duct Furnace
Accessory

Intertek

INDOOR
Indirect Gas-Fired Duct Furnace

Indoor IN-KI shown

Download specification at:
renewaire.com/specifications

SPECIFICATIONS

Heater Type:
Indirect Gas-Fired Duct Furnace

Typical Input Capacity (MBH):
50, 75, 100, 125, 150, 175,
200, 250, 300, 350, 400

Standard Features:
Tubular heaters
Indirect natural gas fired
Indoor installation
80% thermal efficiency
Horizontal airflow
Rated for elevations from 0 – 2,000 ft.
409 stainless steel heat exchanger
409 stainless steel burners
Flue/combustion air – indoor models
  Vertical (separated indoor)
  Vertical top exhaust with louvered intake
Direct spark ignition
1-stage/2-stage gas controls
Induced draft venting
Terminal block for power and control wiring
Automatic high limit safety shut-off
Auxiliary manual high limit switch
Combustion air pressure switch
Air proving switch
Combination gas valve with shutoff

Standard Features (continued):
Flame rollout switch
Manual shut off valve
3/8" condensate drain connection

Voltages & Phase:
Single phase - 120V, 208V, 230V

Control Voltage:
24 VAC

Dimensions:
See table 2

Shipping:
Shipped loose with base unit and installed in the field

Options:
Indirect propane fired fuel
Elevation correction for elevation > 2,000 ft.
304 stainless steel heat exchanger
5:1 continuous electronic modulation for all furnaces
10:1 continuous electronic modulation for furnaces
  200 MBH and larger
Duct thermostat for modulation control
Disconnect switch
Power fusing

Accessory:
Duct thermostat for 1-stage/2-stage control
Duct thermostat for modulation control

FLUE AND COMBUSTION AIR CONFIGURATION

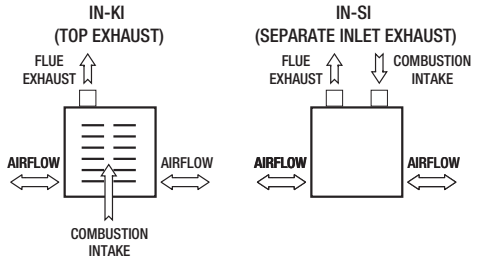

Note: The total equivalent length of vent pipe must not exceed 50 feet. If equivalent length exceeds 50 feet refer to IOM for recommendations.

Caution: All indirect gas-fired duct furnaces to be installed downstream of the ERV and on the positive side of the supply fan.

TEMPERATURE RISE AND PRESSURE DROP

FIGURE 1 GAS FURNACE 50-200 MBH

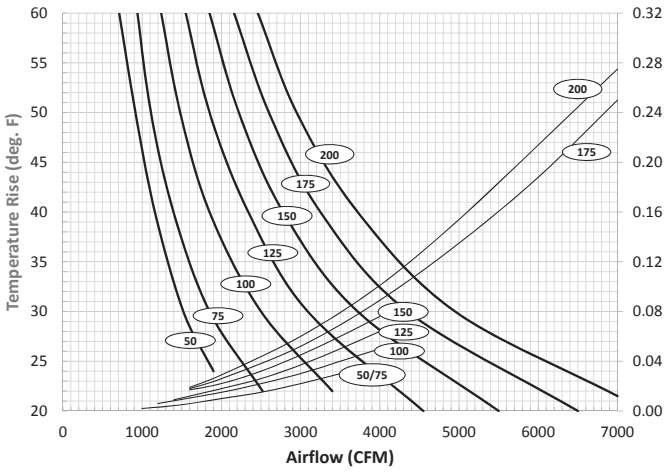

FIGURE 2 GAS FURNACE 250-400 MBH

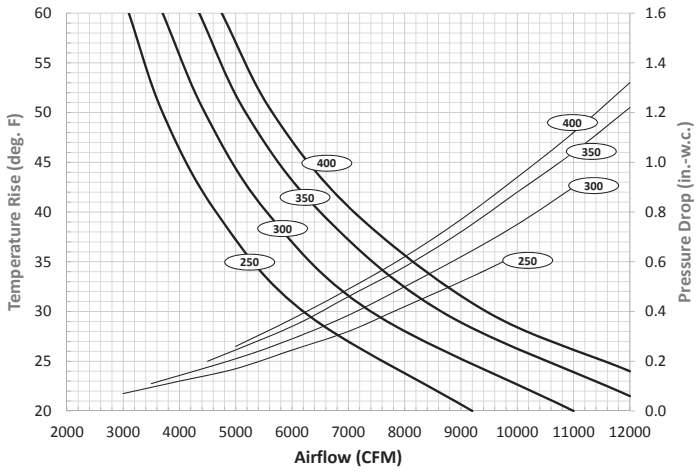

Specifications may be subject to change without notice.

RenewAire Energy Recovery Ventilation

DUCT FURNACE DIMENSIONS

FIGURE 3 IN-KI (TOP EXHAUST INDOOR)

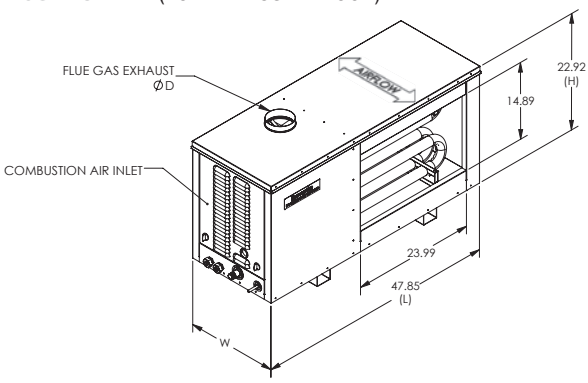

FIGURE 4 IN-SI (SEPARATE INLET EXHAUST INDOOR)

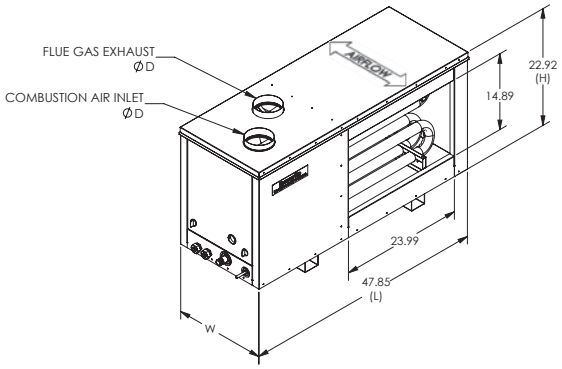

TABLE 2

Size	Tubes	Input Rate	Output	Min/Max Temperature Rise through Furnace (°F)									Vent Locations IN-KI, IN-SI			Diameter	Unit Weight	Shipping Weight
				20	25	30	35	40	45	50	55	60	"W"	"L"	"H"	"D"		
MBH	Qty.	Btuh	Btuh	Nom. Duct Opening Airflow (CFM)									inch	inch	inch	inch	lb	lb
50	3	50,000	40,000	1852	1481	1235	1058	926	823	741	673	617	15.7	47.8	22.9	5	127	207
75	3	75,000	60,000	2778	2222	1852	1587	1389	1235	1111	1010	926	15.7				127	207
100	4	100,000	80,000	3704	2963	2469	2116	1852	1646	1481	1347	1235	18.4				142	222
125	5	125,000	100,000	4630	3704	3086	2646	2315	2058	1852	1684	1543	21.2				169	249
150	6	150,000	120,000	5556	4444	3704	3175	2778	2469	2222	2020	1852	23.9				160	240
175	7	175,000	140,000	6481	5185	4321	3704	3241	2881	2593	2357	2160	26.7				180	260
200	8	200,000	160,000	7407	5926	4938	4233	3704	3292	2963	2694	2469	29.4			6	196	276
250	10	250,000	200,000	9259	7407	6173	5291	4630	4115	3704	3367	3086	34.9				245	325
300	12	300,000	240,000	11111	8889	7407	6349	5556	4938	4444	4040	3704	40.4				279	384
350	14	350,000	280,000	12963	10370	8642	7407	6481	5761	5185	4714	4321	45.9				324	429
400	15	400,000	320,000	14815	11852	9877	8466	7407	6584	5926	5387	4938	48.7				394	499

Note: For a single furnace, 20° F minimum temperature rise, 60° F maximum temperature rise.

INDIRECT GAS-FIRED DUCT FURNACE DIMENSIONS

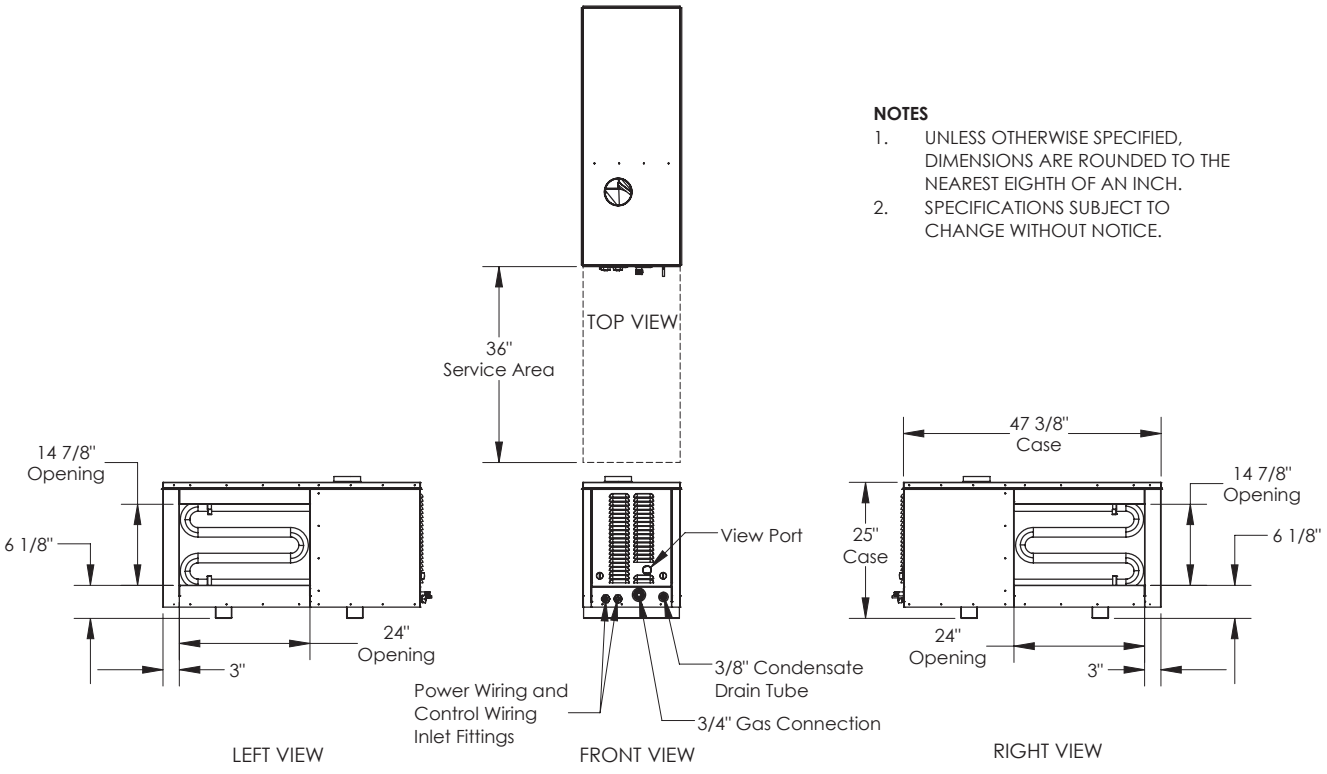

Specifications may be subject to change without notice.

GH OUTDOOR Indirect Gas-Fired Duct Furnace Accessory

Intertek

ROOFTOP
Indirect Gas-Fired Duct Furnace

Rooftop RT-NO shown

Download specification at:
renewaire.com/specifications

SPECIFICATIONS

Heater Type:
Indirect Gas-Fired Duct Furnace

Typical Input Capacity (MBH):
50, 75, 100, 125, 150, 175,
200, 250, 300, 350, 400

Standard Features:
Tubular heaters
Indirect natural gas fired
Outdoor installation
80% thermal efficiency
Horizontal airflow
Rated for elevations from 0 – 2,000 ft.
409 stainless steel heat exchanger
409 stainless steel burners
Flue/combustion air – outdoor models
  Horizontal separated outdoor with hoods
  Vertical top exhaust with intake hood
Direct spark ignition
2-stage gas controls
Induced draft venting
Terminal block for power and control wiring
Automatic high limit safety shut-off
Auxiliary manual high limit switch
Combustion air pressure switch
Air proving switch

Standard Features (continued):
Combination gas valve with shutoff
Flame rollout switch
Manual shut off valve
3/8" condensate drain connection

Voltages & Phase:
Single phase - 120V, 208V, 230V

Control Voltage:
24 VAC

Dimensions:
See table 1

Shipping:
Shipped loose with base unit and installed in the field

Options:
Indirect propane fired fuel
Elevation correction for elevation > 2,000 ft.
304 stainless steel heat exchanger
5:1 continuous electronic modulation for all furnaces
10:1 continuous electronic modulation for furnaces
  200 MBH and larger
Duct thermostat for modulation control
Disconnect switch
Power fusing

Accessory:
Duct thermostat for 2-stage control
Duct thermostat for modulation control
Duct curb

FLUE AND COMBUSTION AIR CONFIGURATION

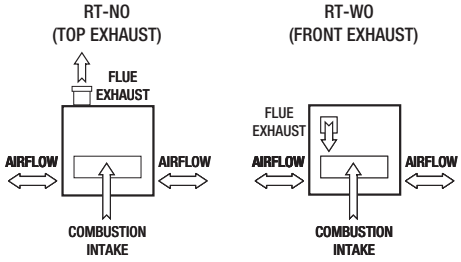

Caution: All indirect gas-fired duct furnaces to be installed downstream of the ERV and on the positive side of the supply fan.

TEMPERATURE RISE AND PRESSURE DROP

FIGURE 1 GAS FURNACE 50-200 MBH

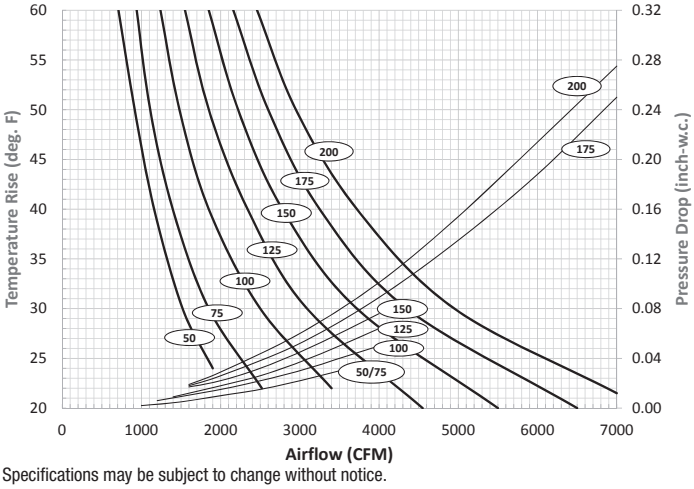

FIGURE 2 GAS FURNACE 250-400 MBH

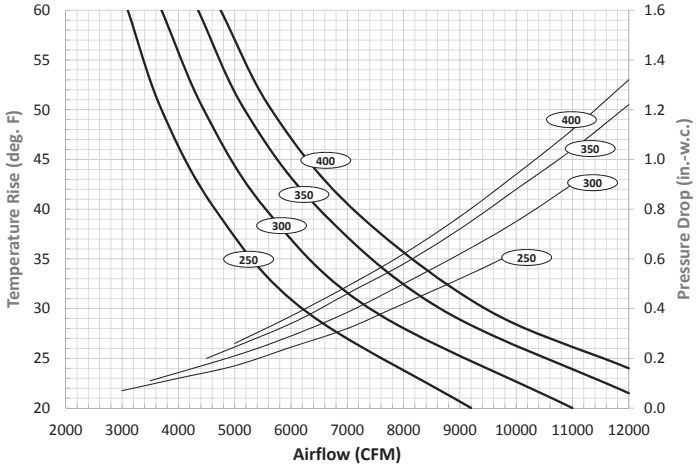

Specifications may be subject to change without notice.

RenewAire Energy Recovery Ventilation

DUCT FURNACE DIMENSIONS

FIGURE 3 RT-NO (TOP EXHAUST OUTDOOR)

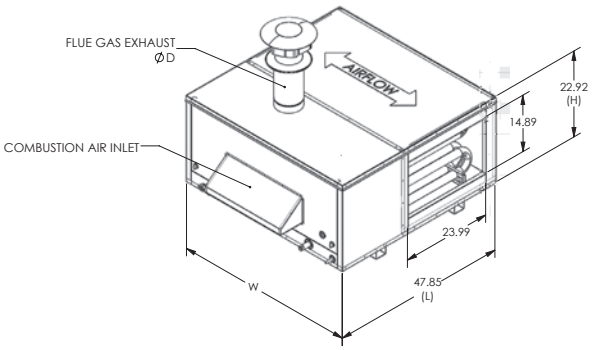

FIGURE 4 RT-WO (FRONT EXHAUST OUTDOOR)

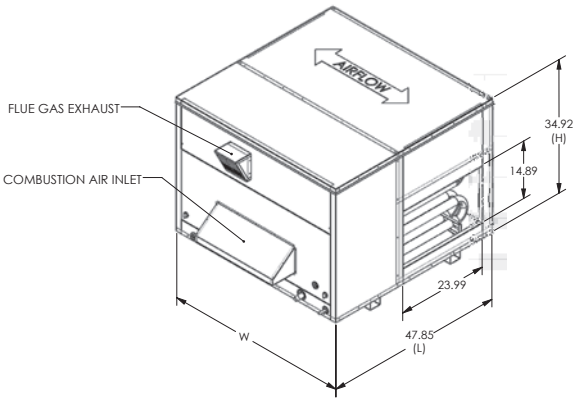

TABLE 1

Size	Tubes	Input Rate	Output	Min/Max Temperature Rise through Furnace (°F)									Vent Locations				Diameter	Unit Weight	Shipping Weight
				20	25	30	35	40	45	50	55	60	RT-NO, RT-WO "W"	RT-NO "L"	RT-WO "H"	RT-WO "H"	"D"		
MBH	Qty.	Btuh	Btuh	Nom. Duct Opening Airflow (CFM)									inch	inch	inch	inch	inch	lb	lb
50	3	50,000	40,000	1852	1481	1235	1058	926	823	741	673	617	15.7	47.8	22.9	34.9	5	127	207
75	3	75,000	60,000	2778	2222	1852	1587	1389	1235	1111	1010	926	15.7					127	207
100	4	100,000	80,000	3704	2963	2469	2116	1852	1646	1481	1347	1235	18.4					142	222
125	5	125,000	100,000	4630	3704	3086	2646	2315	2058	1852	1684	1543	21.2					169	249
150	6	150,000	120,000	5556	4444	3704	3175	2778	2469	2222	2020	1852	23.9					160	240
175	7	175,000	140,000	6481	5185	4321	3704	3241	2881	2593	2357	2160	26.7					180	260
200	8	200,000	160,000	7407	5926	4938	4233	3704	3292	2963	2694	2469	29.4				6	196	276
250	10	250,000	200,000	9259	7407	6173	5291	4630	4115	3704	3367	3086	34.9					245	325
300	12	300,000	240,000	11111	8889	7407	6349	5556	4938	4444	4040	3704	40.4					279	384
350	14	350,000	280,000	12963	10370	8642	7407	6481	5761	5185	4714	4321	45.9					324	429
400	15	400,000	320,000	14815	11852	9877	8466	7407	6584	5926	5387	4938	48.7					394	499

Note: For a single furnace, 20° F minimum temperature rise, 60° F maximum temperature rise.

INDIRECT GAS-FIRED DUCT FURNACE DIMENSIONS

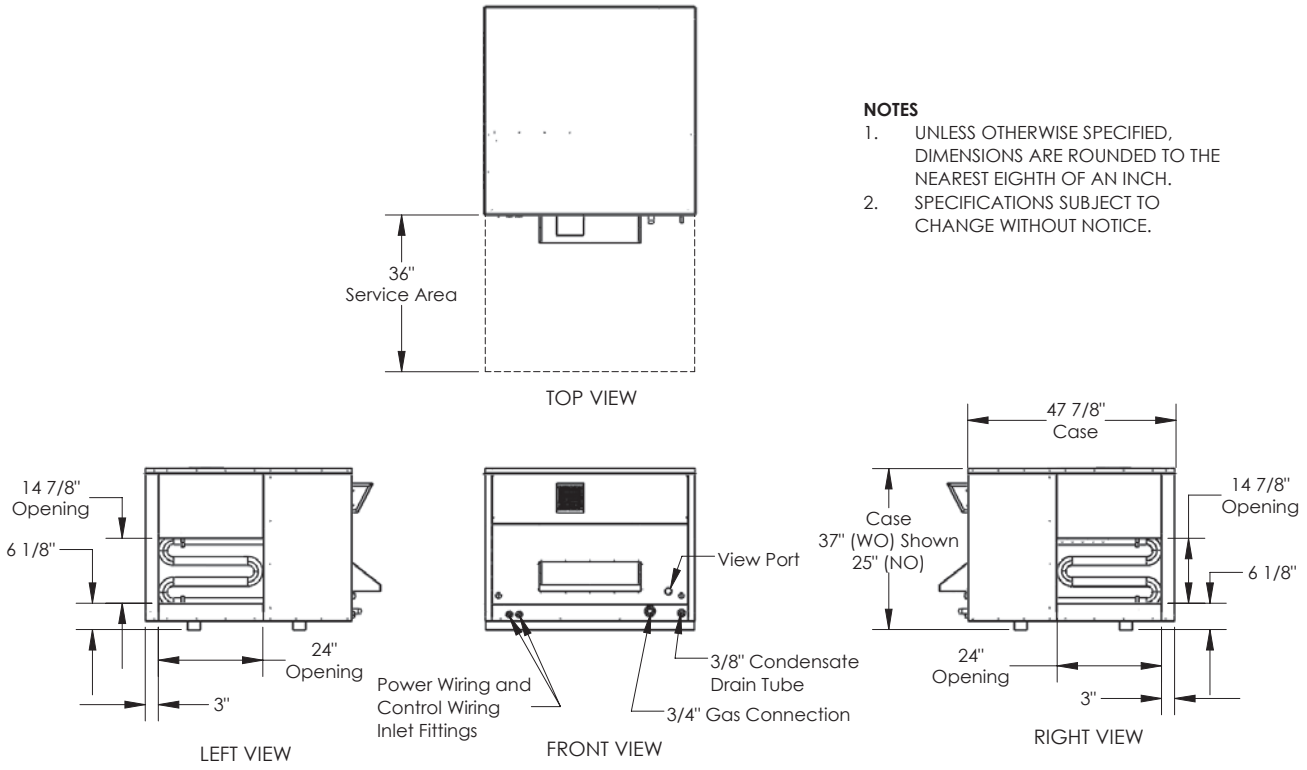

NOTES

1. UNLESS OTHERWISE SPECIFIED, DIMENSIONS ARE ROUNDED TO THE NEAREST EIGHTH OF AN INCH.
2. SPECIFICATIONS SUBJECT TO CHANGE WITHOUT NOTICE.

Specifications may be subject to change without notice.

THIS PAGE IS INTENTIONALLY LEFT BLANK.

EV450/HE MODEL CONFIGURATION GUIDE

Note: Not all options are available on every model.

MODEL NUMBER						J				-						-	-						-		
DIGIT NUMBER	1	2	3	4	5	6	7	8	9	10	11	12	13	14	15	16	17	18	19	20	21	22	23	24	25

Digits 1 - 5: Model

"EV450", "HE-1X", "HE1.5","HE-2X", "HE-3X", "HE-4X", "HE-6X, "HE-8X"

Digits 7 - 8: Location

"IN" = Indoor
"RT" = Rooftop

Digit 9: Orientation (see Restriction 1)

"V", "H" (Indoor Units)
"V", "H", "R", "F", "C" (Rooftop Units)
"-" = Default in EV450

Digit 11: Wall Type

"S" = Single
"D" = Double

Digit 12: Phase (see Restriction 7)

"1" = Single Phase
"3" = Three Phase

Digit 13: Voltage (see Restrictions 2, 3, 4, 5, 6 & 18))

"1" = 115V
"4" = 460V
"5" = 208-230V
"8" = 575V
"9" = 277V

Digit 14: FA Horsepower (see Restriction 7 & 18)

"-" = Standard EV450 Motors
"H" = 0.75 HP Standard Direct-Drive Motors (HE-1X only)
"E" = EC Direct Drive Motors (EV450, HE-1X and HE1.5 only)
"S" = Standard Impellers (HE1.5 only)
"U" = 1.5HP (HE-2X only)
"V" = 2HP (HE-2X, HE-3X, HE-4X only)
"W" = 3HP (HE-3X, HE-4X only)
"X" = 5HP (HE-3X, HE-4X, HE-6X, HE-8X only)
"Y" = 7.5HP (HE-6X, HE-8X only)
"Z" = 10HP (HE-8X only)

Digit 15: EA Horsepower (see Restriction 7 & 18)

"-" = Standard EV450 Motors
"H" = 0.75 HP Standard Direct-Drive Motors (HE-1X only)
"E" = EC Direct Drive Motors (EV450, HE-1X and HE1.5 only)
"S" = Standard Impellers (HE1.5 only)
"U" = 1.5HP (HE-2X only)
"V" = 2HP (HE-2X, HE-3X, HE-4X only)
"W" = 3HP (HE-3X, HE-4X only)
"X" = 5HP (HE-3X, HE-4X, HE-6X, HE-8X only)
"Y" = 7.5HP (HE-6X, HE-8X only)
"Z" = 10HP (HE-8X only)

Digit 18: Flow Control* (see Restrictions 11, 12, & 14)

"-" = No Isolation Dampers (with no Bypass)
"D" = Motorized Damper both Airstreams (with no Bypass)
"E" = Motorized Damper EA or RA Airstream (with no Bypass)
"F" = Motorized Damper FA or OA Airstream (with no Bypass)
"S" = Backdraft Damper OA Airstream (with no Bypass)
"R" = Backdraft Damper EA Airstream (with no Bypass)
"B" = Backdraft Damper both Airstreams (with no Bypass)
"T" = Motorized Damper OA, Backdraft Damper EA (with no Bypass)
"0" = Dry Bulb Bypass Dampers only
"1" = Dry Bulb Bypass with Motorized Dampers all Airstreams
"4" = Dry Bulb Bypass with Backdraft Damper OA Airstream
"5" = Enthalpy Bypass Dampers only
"6" = Enthalpy Bypass with Motorized Dampers all Airstreams
"9" = Enthalpy Bypass with Backdraft Damper OA Airstream

Digit 19: Unit Control (see Restrictions 8, 9, 10, 15, & 16)

"A" = Standard Unit Control Wiring
"D" = Independent Blower Control (HE-1X and HE1.5 only)
"V" = Onboard VFD Both Airstreams
"F" = Onboard VFD FA Airstream
"E" = Onboard VFD EA Airstream
"G" = Terminal Strip for EC Motors or Impellers

Digit 20: Unit Fusing

"N" = Non-Fused (Standard)
"F" = Fused

Digit 21: Unit Control Enhancements (see Restrictions 16 & 17)

"T" = Transformer with Isolation Relay (Standard)
"1" = Enhanced Controls
"2" = Premium Controls
"3" = Enhanced Controls with BACNET License
"4" = Premium Controls with BACNET License

Digit 22: Filter Options (see Restriction 17)

"-" = None
"F" = Filter Monitor Both Airstreams

Digit 23: Other Options

"-" = None (Reserved)

Digit 24: Paint and Customization

"-" = None
"W" = White Paint
"C" = Custom Paint
"X" = Custom Unit

Digit 25: Safety Listing (see Restriction 13)

"L" = Listed
"N" = Non-Listed

***NOTES:**
Digit 6 "J" = G5 Core Type Digits 10, 16 and 17 are not used in these models. Digit 15 is not used in EV450 models.
***Digit 18: Flow Control: Codes for Bypass: Face damper also acts as Isolation damper in EA or RA Airstream.**

Restrictions:

1: Orientation Code "C" not available with models EV450, HE-6X, HE-8X, HE1.5
2: Voltage Codes "1" & "9" only available with Phase Code "1" (Single-Phase).
3: Voltage Codes "4" & "8" only available with Phase Code "3" (Three-Phase).
4: Voltage Code "9" (277V) only available with EV450, HE-1X & HE1.5 models.
5: Voltage Code "8" (575V) not available with EV450, HE-1X & HE1.5 models.
6: Voltage Code "1" only available with FA/EA Horsepower Codes "EE", "E-", "H", "S","U", "V" & "-".
7: Motor Codes "E-" & "EE" (EC Motors) only available with Phase Code "1" (Single Phase)
8: Unit Control Codes " V, F & E" not available in EV450, HE-1XIN, HE1.5IN & HE-1XRTC.
9: Unit Control Code "G" (Terminal Strip) only available in EV450, HE-1X & HE1.5 with Motor Codes "E-" and "EE" (EC Motors).
10: Unit Control Code "D" only available in HE-1X & HE1.5.
11: Dampers and Bypass not available in EV450 or with Orientation Code "C".
12: Backdraft Dampers only available with HE1.5 models.
13: Some units with Customization Code "X", HE-6X & HE-8X models are not safety listed.
14: Bypass only available with Location Code "IN".
15: Unit Control Codes "V", "E" & "F" not available with Voltage Code "1".
16: Unit Control "A" not available with Unit Control Enhancements Codes "1", "2", "3" & "4" in HE-1X and HE-1.5 models.
17: Filter Code "F" not available with Unit Control Enhancements Codes "1", "2", "3" & "4". Filter Monitor is provided with those options.
18: Voltage Code "9" not available with FA/EA Horsepower Codes "EE" & "E-".

For Technical Support E-mail: RenewaireSupport@renewaire.com
To Place an Order E-mail: RenewaireOrders@renewaire.com

EK SERIES ELECTRIC DUCT HEATER CONFIGURATION GUIDE

Note: Not all options are available on every model.

MODEL NUMBER																									
			–																						
DIGIT NUMBER	1	2	3	4	5	6	7	8	9	10	11	12	13	14	15	16	17	18	19	20	21	22	23	24	25

Digits 1 - 2: Heater Type

"EK "= Electric Heater (Standard)

Digits 4 - 5: Width in Inches (see Restriction 1)

08-99

Digits 6 - 7: Height in Inches (see Restriction 2)

08-99

Digits 8 - 10: Capacity in kW (see Restrictions 3, 4 & 5)

001-175

Digit 11: Mount

"S" = Slip In (Standard)
"F = Flanged

Digit 12: Element Style

"C" = Open Coil (Standard)

Digit 13: Element Material

"C" = 60-20-20 Ni-Cr-Fe with Nickel Plate Terminal Pins (Standard)
"A" = 80-20 Ni-Cr with Stainless Steel Terminal Pins

Digit 14: Airflow Orientation

"H" = Horizontal (Standard)
"V" = Vertical

Digit 15: Control Box Offset

"L" = Left Hand (Standard)
"R" = Right Hand

Digit 16: Control Box Recessed

"-" = None (Standard)
"R" = Recessed 1"

Digit 17: Control Box Dust Tight

"-" = None (Standard)
"D" = Dust Tight

Digit 18: Voltage (see Restrictions 7 & 8)

"1" = 120V
"2" = 208V
"3" = 240V
"4" = 480V
"8" = 600V
"9" = 277V

Digit 19: Phase

"1" = Single-Phase
"3" = Three-Phase

Digit 20: Power Fusing (see Restriction 9)

"-" = None
"F" = Fusing

Digit 21: Stage

"1" = Single (Standard)
"2" = 2-Stage
"4" = 4-Stage

Digit 22: Control Voltage

"S" = 24VAC

Digit 23: Control Type (see Restrictions 10, 11 & 12)

"D" = Duct Thermostat with Sensor (Standard)
"E" = Electronic Step Control with Sensor
"S" = SCR (For BAS System)
"V" = SCR with Analog Sensor (0-10Vdc)

Digit 24: Time Delay

"-" = None (Standard)

Digit 25: Pilot Light

"N" = None (Standard)
"L" = Light

***NOTES:**
Digit 3 is not used in this model.
All heaters come with standard features: Disconnect Switch, Air Flow Switch (non adjustable), Control Transformer
Descriptions of feature and options are found in the installation and operation manual.

Restrictions:

1: Width inches entered as a whole number.
2: Height inches entered as a whole number.
3: Heater density should be less than 30kW/ft². $\text{DENSITY} = \frac{\text{HEATER CAPACITY (kW)}}{(\text{W" x H"})/144} < 30$
4: Heater capacity kW entered as a whole number.
5: Formulas for calculating kW and temperature rise: $\text{kW} = \frac{\text{CFM} \times \Delta T}{3150}$ $\Delta T = \frac{\text{kW} \times 3150}{\text{CFM}}$
7: Voltage Codes "1" & "9" only available with Phase Code "1" (Single-Phase).
8: Voltage Codes "4" & "8" only available with Phase Code "3" (Three-Phase).
9: Power Fusing Code "F" required when amperage is >48A. (based on kW and voltage)
10: Control Type Code "D" only available with Stage Code "1" & "2".
11: Control Type Code "E" only available with Stage Code "4".
12: Control Type Code "S" & "V" only available with Stage Code "1", unless amperage is greater than or equal to 96A, then Stage Code "4" is automatically selected.

For Technical Support E-mail: RenewaireSupport@renewaire.com
To Place an Order E-mail: RenewaireOrders@renewaire.com

RenewAire Energy Recovery Ventilation

GH SERIES INDIRECT GAS-FIRED DUCT FURNACE CONFIGURATION GUIDE

Note: Not all options are available on every model.

MODEL NUMBER																									
			-																		-			-	-
DIGIT NUMBER	1	2	3	4	5	6	7	8	9	10	11	12	13	14	15	16	17	18	19	20	21	22	23	24	25

Digits 1 - 2:	Duct Furnace Type
"GH" = Gas Furnace 50-400 MBH	

Digits 4 - 5:	Location
"IN" = Indoor "RT" = Rooftop	

Digits 6 - 7:	Vent Location
"SI" = Separated Top Indoor "KI" = Top Exhaust Indoor "WO" = Front Exhaust Outdoor "NO" = Top Exhaust Outdoor	

Digits 8 - 10:	Input Capacity in MBH
"050", "075", "100", "125", "150", "175", "200", "250", "300", "350", "400"	

Digit 11:	Fuel Type
"N" = Natural Gas (Standard) "P" = Propane	

Digits 12 - 13:	Tube Material
"SS" = 409 Stainless Steel (Standard) "CS" = 304 Stainless Steel	

Digit 14:	Airflow Orientation
"H" = Horizontal	

Digit 15:	Thermal Efficiency
"S" = 80%	

Digit 16:	Elevation
"S" = 0 - 2000' (Standard) "2" = 2001'- 3000' "3" = 3001' - 4000' "4" = 4001' - 5000' "5" = 5001' - 6000' "6" = 6001' - 7000' "Y" = 7001' and above	

Digit 17:	Disconnect Switch
"N" = None (Standard) "D" = Disconnect Switch	

Digit 18:	System/Inducer Voltage (see Restriction 2)
"1" = 115V "2" = 208V "3" = 230V	

Digit 19:	Phase
"1" = Single Phase	

Digit 20:	Power Fusing (see Restriction 3)
"N" = None "F" = Fusing	

Digit 22:	Control Voltage
"S" = 24VAC	

Digit 23:	Control Type (see Restriction 1)
"T" = Two Stage High/Low with Thermostat (Standard) "S" = Single Stage On/Off with Thermostat "E" = Modulating 5:1 (Natural Gas)/3:1 (Propane) with Thermostat "W" = Modulating 10:1 (Natural Gas)/6:1 (Propane) with Thermostat "2" = Two Stage High/Low without Thermostat "1" = Single Stage On/Off without Thermostat "M" = Modulating 5:1 (Natural Gas)/3:1 (Propane) without Thermostat "V" = Modulating 10:1 (Natural Gas)/6:1 (Propane) without Thermostat	

***NOTE:**
Digits 3, 21, 24 & 25 are not used in this model.
All heaters come with standard features: Air Proving Switch, Auxiliary High Temperature Limit Switch
Descriptions of feature and options are found in the installation and operation manual.

Restrictions:	
1: Control Type Code "V" & "W" not available with Input Capacity in MBH Codes "050", "075", "100", "125", "150" & "175". 2: System/Inducer Voltage Code "2" not available with Input Capacity in MBH Codes "050", "075", "100", "125" , "150", "175" & "200". 3. Power Fusing Code “F” only available with Disconnect Switch Code “D”. Power Fusing Code “F” always selected when Disconnect Switch Code “D” is selected.	

For Technical Support E-mail: RenewaireSupport@renewaire.com
To Place an Order E-mail: RenewaireOrders@renewaire.com

INDOOR AIR QUALITY MATTERS

- **Deficient IAQ** is an EPA **top-five** health risk
- People spend **90%** of their **time indoors**
- **Indoor air** can be 2-5 times and up to 100 times **more polluted than outdoor air**

BENEFITS OF INCREASED VENTILATION

TECHNICAL/APPLICATIONS SUPPORT

The goal of our technical-support team is to provide the **BEST CUSTOMER SERVICE** in the HVAC industry. You can count on our knowledgeable and seasoned staff for all your technical, application and service needs, and we'll respond quickly and effectively to answer any of your questions.

CONTACT RENEWAIRE

PHONE:
1.800.627.4499

FAX:
608.221.2824

FOR TECHNICAL SUPPORT:
RenewaireSupport@renewaire.com

TO PLACE AN ORDER:
RenewaireOrders@renewaire.com

RenewAire® Energy Recovery Ventilation

RELEVANT EVERYWHERE

EVERY GEOGRAPHIC REGION
Our ERVs function perfectly across the world in every geographic region.

EVERY CLIMATE
Our ERVs operate in every climate—from Alaska to Florida, and everywhere in between.

EVERY PROJECT
From massive skyscrapers to cozy residential homes, our ERVs can be used in every size project and in every code jurisdiction.

RENEWAIRE TEMPERS THE AIR

Our **ERVs moderate the extremes of outdoor supply-air temperature and humidity year-round**, providing a sustainable solution for fresh air that feels like a perfect spring day.

APPLIED EVERYWHERE

When indoor occupants breathe in unclean air, this harms their health and causes cognitive impairment. Our ERVs can provide cleaner and healthier indoor air for every type of building in the world, thus improving occupants' wellbeing, while also reducing energy costs.

RESIDENTIAL
The increased airtightness of newer and remodeled homes is causing deficient IAQ, resulting in more health problems for indoor occupants.

COMMERCIAL
As commercial buildings become more airtight, deficient IAQ is increasing and causing sickness, absenteeism and decreased productivity.

HEALTHCARE
The high occupant density of hospitals, nursing homes and other healthcare facilities results in deficient IAQ and ensuing health problems for patients and staff alike.

RESTAURANTS/COFFEE SHOPS
The large volume of indoor occupants in restaurants and coffee shops causes deficient IAQ and subsequent health problems.

RETAIL
The high level of foot traffic in retail stores leads to deficient IAQ and the potential sickness of shoppers, which can negatively impact sales.

DAYCARE
Crowded daycare facilities breed deficient IAQ, thus causing health problems for everyone—especially children who are more vulnerable.

EDUCATION (LOWER AND HIGHER)
With students and teachers packed into tight classrooms, instances of deficient IAQ go up, resulting in academic performance and test scores going down.

GOVERNMENT
Aging and crowded government buildings result in deficient IAQ, which can impair worker performance and productivity.

EVERY TYPE OF BUILDING
Every type of building can benefit from the enhanced IAQ generated by RenewAire ERVs, including veterinary clinics, nail salons and manufacturing facilities, among others.

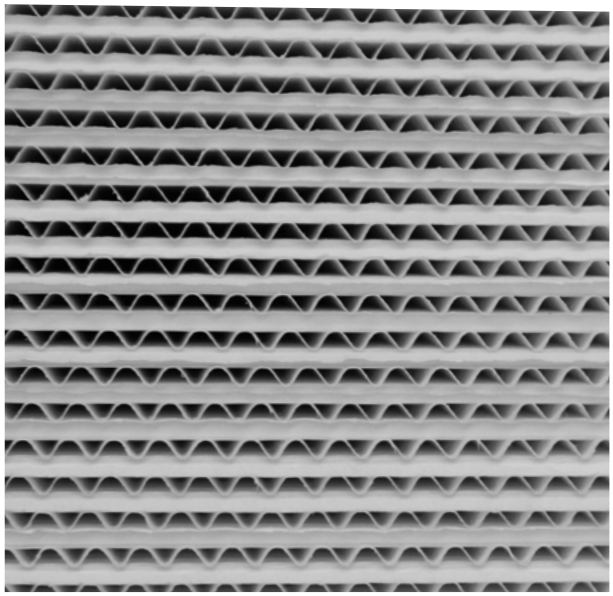

RENEWAIRE EVERYWHERE

RenewAire ERVs can be applied everywhere across all commercial, educational, institutional, light industrial and residential buildings. Our technology excels in every geographic region, every climate, and every size project.

Soler&Palau Ventilation Group

Member of the S&P Group Family of Brands

RenewAire® Energy Recovery Ventilation

LIT114_01 (08/19)